IN5393

Inductive sensor

IN-3004-BPKG/3,5M/US

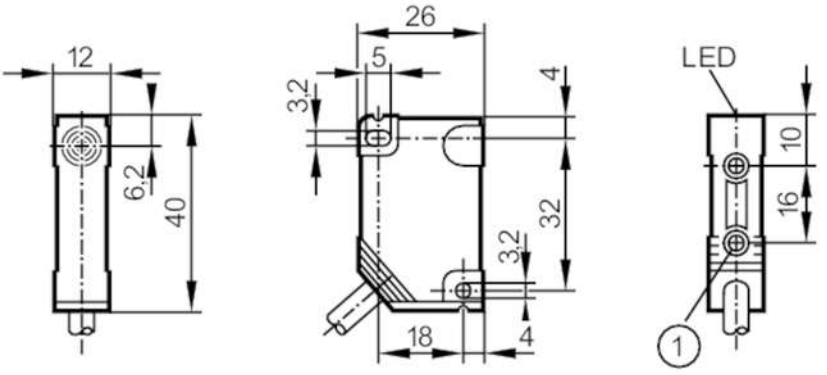

1 threaded bush M3 Depth 5.8 mm
Tightening torque maximum 1.2 Nm screw fixing class 8.8
when brass insert in contact with counterpart

Product characteristics		
Electrical design		PNP
Output function		normally open
Sensing range	[mm]	4
Housing		rectangular
Dimensions	[mm]	40 x 12 x 26
Electrical data		
Operating voltage	[V]	10...36 DC
Current consumption	[mA]	< 15
Protection class		II
Reverse polarity protection		yes
Outputs		
Electrical design		PNP
Output function		normally open
Max. voltage drop switching output DC	[V]	2.5
Permanent current rating of switching output DC	[mA]	250
Switching frequency DC	[Hz]	1200
Short-circuit protection		yes
Type of short-circuit protection		pulsed
Overload protection		yes
Detection zone		
Sensing range	[mm]	4
Real sensing range Sr	[mm]	4 ± 10 %
Operating distance	[mm]	0...3.25
Accuracy / deviations		
Correction factor		steel: 1 / stainless steel: 0.7 / brass: 0.5 / aluminium: 0.4 / copper: 0.3

IN5393

Inductive sensor

IN-3004-BPKG/3,5M/US

Hysteresis	[% of Sr]	1...15	
Switch point drift	[% of Sr]	-10...10	
Operating conditions			
Ambient temperature	[°C]	-25...70	
Protection		IP 67	
Tests / approvals			
EMC		EN 60947-5-2	
		EN 55011	class B
MTTF	[years]	1925	
Mechanical data			
Weight	[g]	321	
Housing		rectangular	
Mounting		non-flush mountable	
Dimensions	[mm]	40 x 12 x 26	
Materials		PBT; Lock nut: stainless steel	
Displays / operating elements			
Display		switching status	1 x LED, yellow
Remarks			
Pack quantity		1 pcs.	

Electrical connection

Cable: 3.5 m, PVC; 3 x 0.14 mm²

Electrical connection - plug

Connector: 1 x M12; coding: A



Connection

