PTS810 Series
Microminiature SMT Top Actuated



Description

Control panels, keyless entry products and remote control devices all feature the PTS810 series microminiature SMT top actuated switches. Available in a thickness of 2.5mm with a 4.2 x 3.2mm footprint, the PTS810 is recognized by designers for being reliable and long-lasting in the face of constant use.

Features & Benefits

- 4.2 x 3.2 mm footprint
- 2.5 mm thickness
- High number of cycles
- Color coded actuators

Applications

- Control panels
- Nomad devices
- Remote controls

Specifications

Function	Momentary action
Contact Arrangement	1 make contact = SPST NO
Terminals	J type for SMT
Travel	160 & 260 gf: 0.15mm ± 0.1mm 400 & 600 gf: 0.20mm ± 0.1mm

Electrical Characteristics

Max. Voltage	16 VDC
Max. Current DC	50 mA
Dielectric Strength	250 vA C (1mn)
Contact Resistance	≤ 500 mΩ
Insulation Resistance	≥ 100 MΩ
Bounce Time	≤ 10 ms

Environmental Characteristics

Operating Temperature	-40˚C to 85˚C

Dimensions (mm)

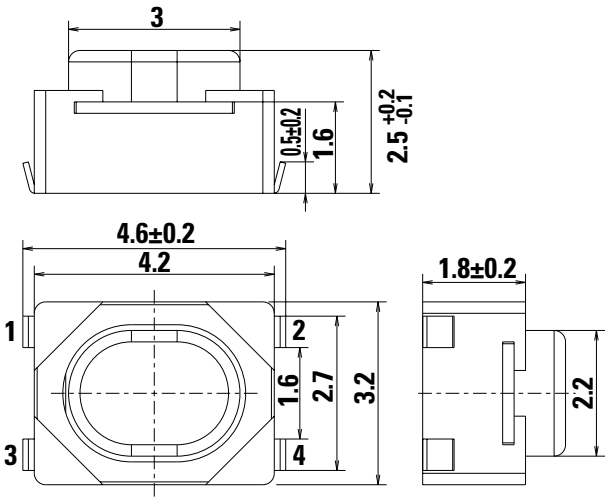

Recommended PCB Layout

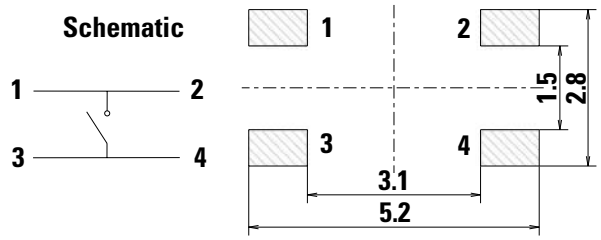

© 2024 Littelfuse, Inc.
Specifications are subject to change without notice.
Revised: CM.09/20/24

PTS810 Series
Microminiature SMT Top Actuated

Mechanical Characteristics

Item Description	Operation Force (gf)	Operating Life (operations)
PTS810 SJM 250 SMTR LFS	160 ± 50	150,000
PTS810 SJK 250 SMTR LFS	260 ± 70	50,000
PTS810 SJG 250 SMTR LFS	400 ± 100	100,000
PTS810 SJS 250 SMTR LFS	600 ± 150	150,000

Notes:
Specifications listed above are for switches with standard options. For information on specific and custom switches, consult Customer Service Center. The PTS series is not certified for using in Automotive application and no PPAP. However, in the case of some automotive accessories and specific applications for 2 and 3 wheeled vehicles the PTS is widely used and very suitable.

Soldering Profile

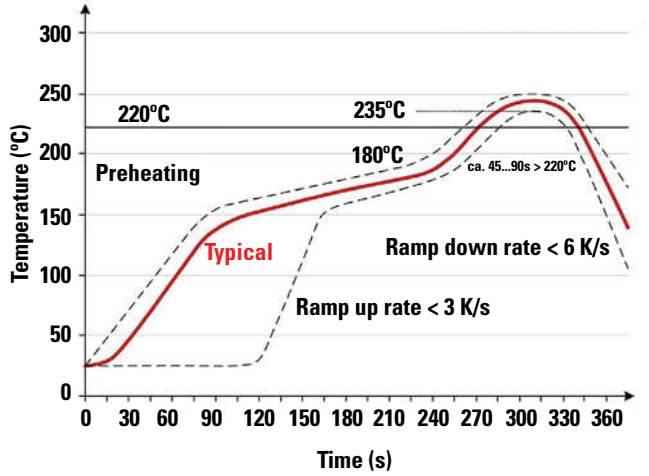

Note: Up to 2 reflow cycles in accordance with the above temperature profile

Soldering process: Depending on the application, this component is suited to the following methods:

- This component is suited to the following methods: Infrared Reflow Soldering in accordance with J-STD-020
- Terminals being silver or gold plated over a nickel barrier, the use of slightly activated flux is suitable.
- Lead free soldering process in accordance with the definition on the left.

© 2024 Littelfuse, Inc.
Specifications are subject to change without notice.
Revised: CM.09/20/24

PTS810 Series
Microminiature SMT Top Actuated

Packaging Dimensions (mm)

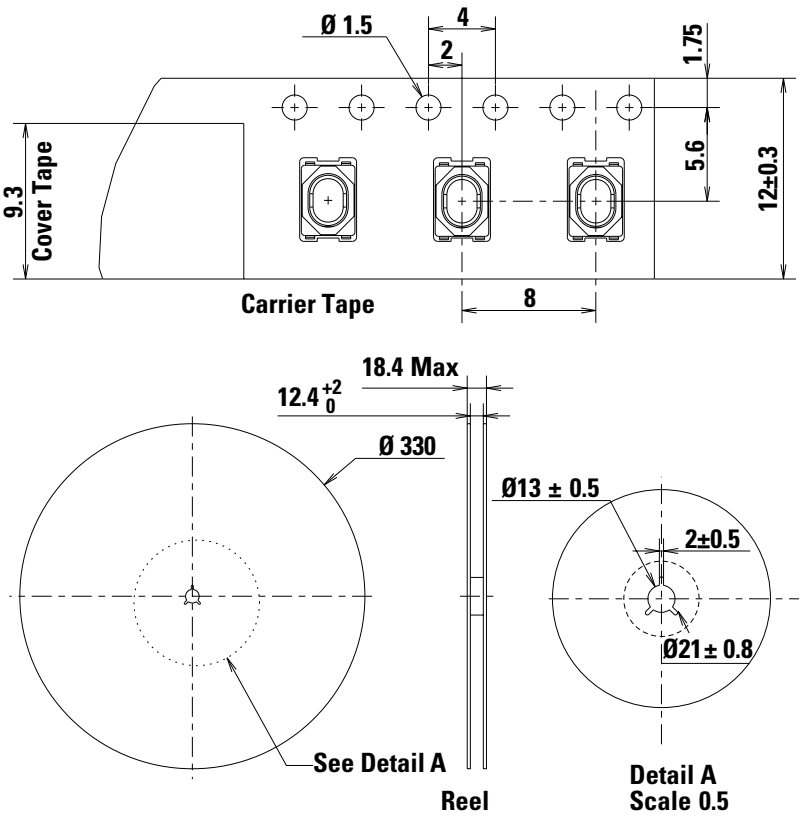

Note: Switches in reels of 2,900 pieces. Dimensions of reels according to EIA 481B. External diameter 330 mm.

Ordering Number

Our easy build-a-switch concept allows you to mix and match options to create the switch you need. To order, select desired option from each category and place it in the appropriate box. For any part number different from those listed above, please consult your local representative.

PTS810 - S - J - x - 250 - SMTR - LFS

Actuator Type
S: Standard

Termination
J: J bend SMT

Actuation Force
M: 160 gf: gray actuator
K: 260 gf: white actuator
G: 400 gf: blue actuator
S: 600 gf: gray actuator

Height
250: 2.5 mm height

Packaging
SMTR: Tape & Reel

LFS: RoHS, silver plated

Liability Limitation

This datasheet does not provide enough information for applications that require a certain level of quality or safety such as automotive, medical systems, or safety equipement. Please contact customer service for the contractual specification package.

Disclaimer Notice - Information furnished is believed to be accurate and reliable. However, users should independently evaluate the suitability of and test each product selected for their own applications. Littelfuse products are not designed for, and may not be used in, all applications. Read complete Disclaimer Notice at http://www.littelfuse.com/disclaimer-electronics.

© 2024 Littelfuse, Inc.
Specifications are subject to change without notice.
Revised: CM.09/20/24