Brand of NTN corporation

Technical data

UCFCE204

Bearing units



Grey cast housing, radial insert ball bearing with socket set screws,seal with slinger

KIT CONTENT

UC204G2, FCE204

VISUAL (S)

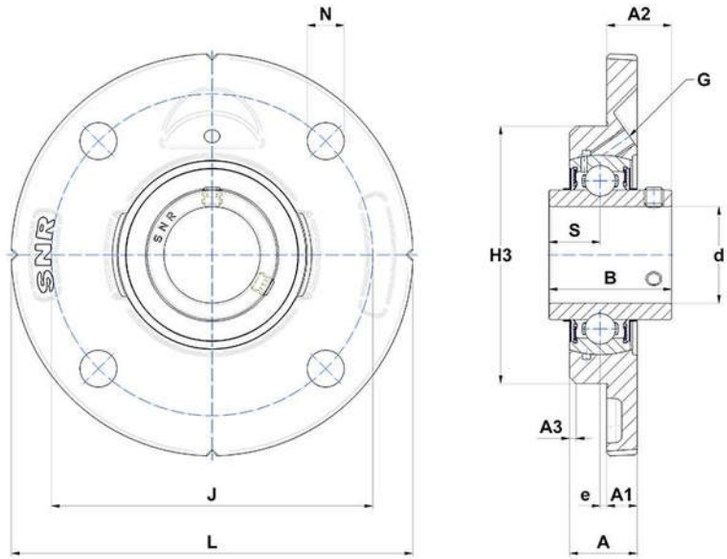

PRODUCT DEFINITION

Brand	SNR
A - Housing height	18 mm
A1 - Housing foot height / flange height	8 mm
A2 - Total height from mounting surface	16,3 mm
A3 - Centering depth / chamfer dimension	2 mm
B - Width of Inner Ring	31 mm

PRODUCT DEFINITION	
d - Shaft diameter	20 mm
e - Distance mounting surface to bearing center	-2 mm
G - Grease fitting	M6x1
H3 - Centering dia	62 mm
J - Mounting holes distance	78 mm
L - Housing width / diameter	100 mm
N - Mounting hole dimension	9 mm
S - Distance front side/bearing centre	12,7 mm

PRODUCT PERFORMANCE	
C - Dynamic load rating	12800000 mN
C0 - Static load rating	6650000 mN
Operating temperature min.	253,15 °K
Operating temperature max.	373,15 °K

OTHER FEATURES	
Mass	0,54 kg
Recommended tightening torque for set screw	5.5 N-m