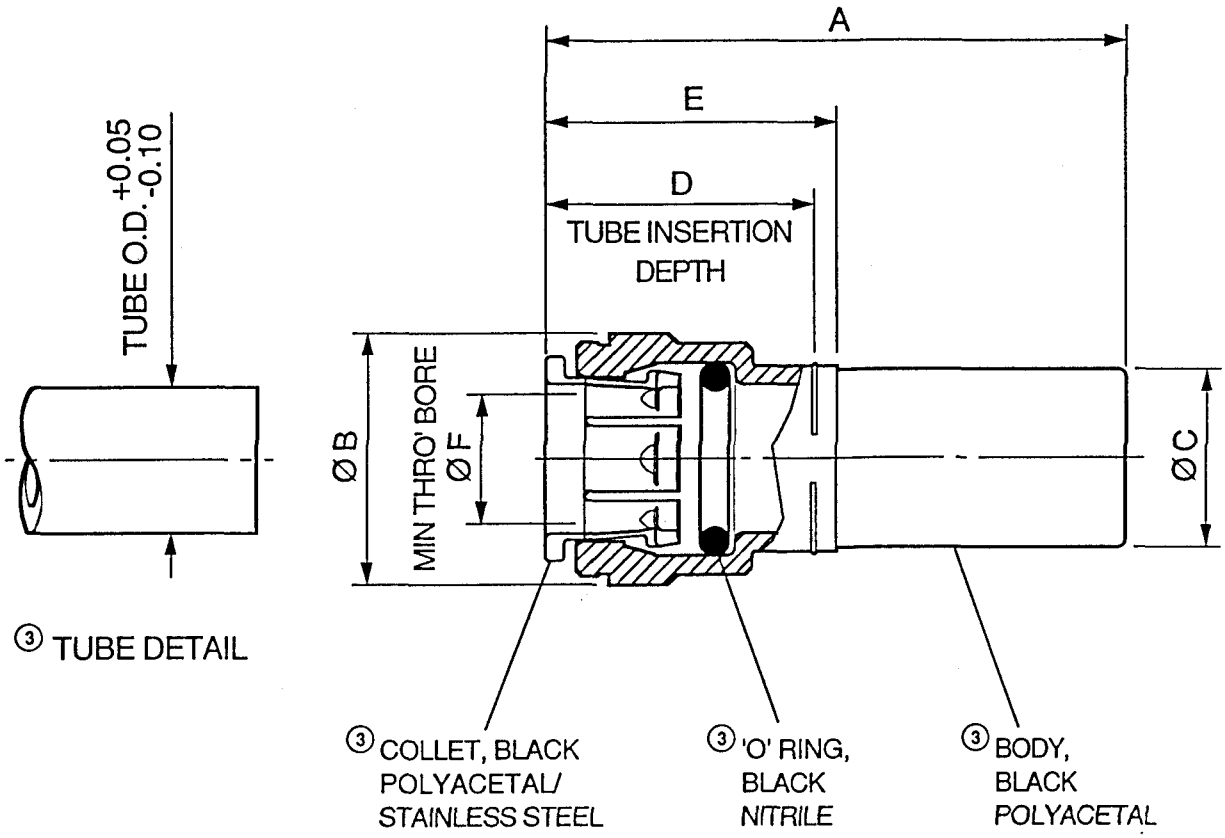

	PRODUCT NO.	DESCRIPTION	A	ØB	ØC	D	E	ØF
	PM061815E	18.0mm TO 15.0mm	71.5	27	18	29	35	12.1
	PM062218E	22.0mm TO 18.0mm	70.5	31.5	22	31.6	35	16
②	PM062215E	22.0mm TO 15.0mm	71.5	27	22	29	35	12.1

The company has a policy of continuous research and development and reserves the right to amend without notice the specification and design of all products illustrated. For details of terms and conditions and any other technical enquiries, please contact our Customer Services Department.

C-5228-CIFM

ISSUE 3 22-01-99