182.72.104.66322Kegelrollenlager

Tapered roller bearings 32205-A (Series 322)

main dimensions to DIN ISO 355 / DIN 720, separable, adjusted or in pairs

The datasheet is only an overview of dimensions and basic load ratings of the selected product. Please always observe all the guidelines in these overview pages. Further information is given on many products under the menu item "Description". You can also order comprehensive information via the Catalogue selection system (https://www.schaeffler.de/content.schaeffler.de/en/news_media/index.jsp) or by telephone on +49 (91 32) 82 - 28 97.

d	25	mm	
D	52	mm	
T	19,25	mm	
a	14	mm	≈
B	18	mm	
C	16	mm	
$C_{a\ min}$	3	mm	
$C_{b\ min}$	3	mm	
d_1	40,2	mm	≈
$D_{a\ max}$	46	mm	
$d_{a\ max}$	31	mm	
$D_{a\ min}$	44	mm	
$D_{b\ min}$	48	mm	
$d_{b\ min}$	31	mm	
$r_{1,2\ min}$	1	mm	
$r_{3,4}$	1	mm	

$r_{a\,min}$	1	mm	
$r_{b\,max}$	1	mm	
m	0,186	kg	≈ Mass
C_r	40000	N	Basic dynamic load rating, radial
C_{0r}	44500	N	Basic static load rating, radial
e	0,36		
Y	1,67		
Y_0	0,92		
C_{ur}	5100	N	Fatigue limit load, radial
n_G	14500	1/min	Limiting speed
n_B	8000	1/min	Reference speed
	T2CD025		Comparative designation to DIN ISO 355

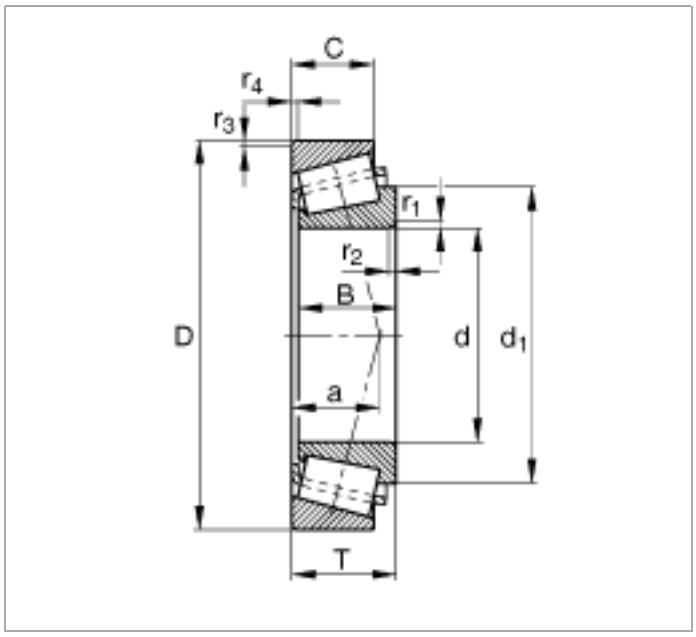

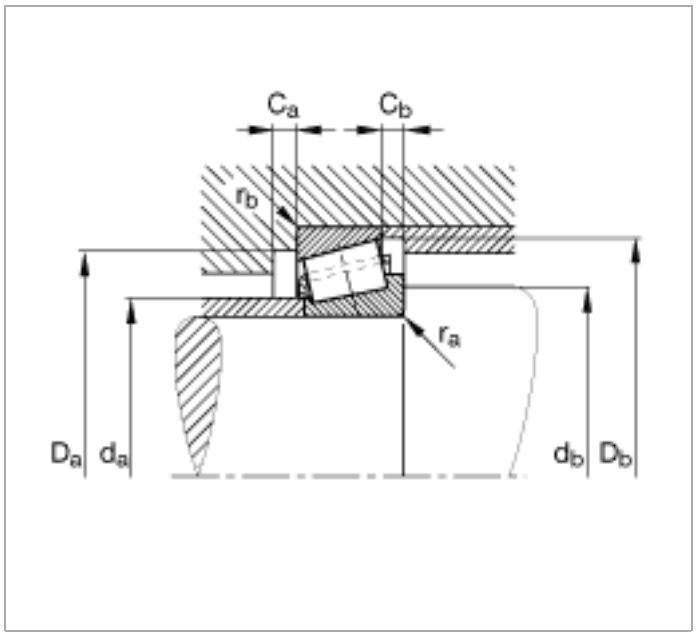
Ca
Cb
rb
ra
Da
da
db
Db