E33298

Process adapter for SMS pipe fitting

ADAPT IFM-SMS DN50/2" O-RG

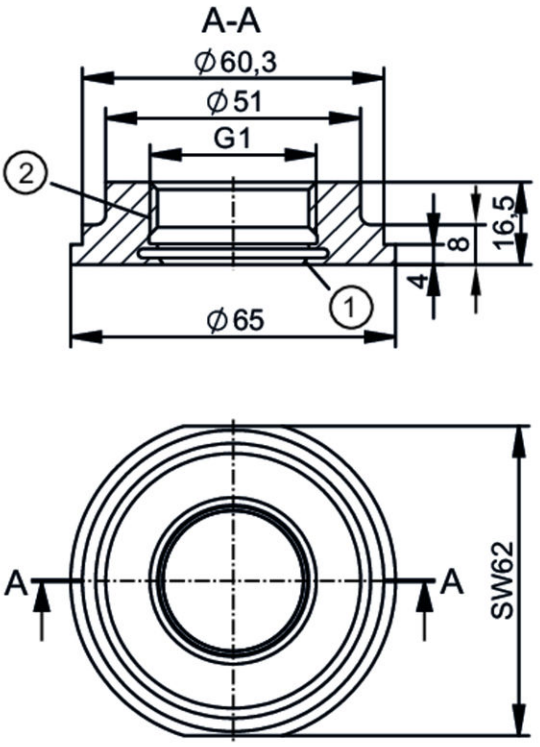

1 sealing area
2 G1 Internal thread Aseptoflex Vario

EC 1935/2004 FDA

Application		
Pressure rating	[bar]	25
Tests / approvals		
Pressure Equipment Directive		A possible classification to PED depends on the application and has to be carried out by the user / operator.
Pressure Equipment Directive EAC		The adapter is intended for use in devices, machines and installations that do not fall under the categories of the technical rule TR CU 032/2013.
Safety instructions		The compatibility between medium and product material has to be checked in all applications.
Mechanical data		
Weight	[g]	264.6
Materials		stainless steel (1.4435 / 316L)
Sensor connection		G 1 internal thread Aseptoflex Vario
Process connection		SMS pipe fitting DN50 (2")
Surface characteristics Ra/Rz of the wetted parts		0.4 / 4
Sealing		Gasket
Hygienic equipment class to DIN 11866		H4
Accessories		
Items supplied		O-ring: 1 x 24 x 2, EPDM, FDA compliant, E30054

E33298

Process adapter for SMS pipe fitting

ADAPT IFM-SMS DN50/2" O-RG

Accessories (optional)	O-ring: 1 x 24 x 2, FKM, FDA compliant, E30123
	sealing ring: 1, PEEK, FDA compliant, E30124

Remarks	
Pack quantity	1 pcs.