DATASHEET - NHI-E-11-PKZ0



Standard auxiliary contact, 1N/O+1N/C, flush mounting, screw connection

Part no.	**NHI-E-11-PKZ0**
Catalog No.	**082882**
Alternate Catalog No.	**XTPAXFA11**
EL-Nummer (Norway)	**4355153**

Delivery program

Product range			Accessories
Accessories			Standard auxiliary contact
			Can be fitted to the front Terminal designation differs to that of an auxiliary contact that can be fitted to the side
Contacts			
N/O = Normally open			1 N/O
N/C = Normally closed			1 NC
Contact diagram			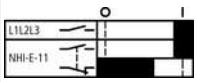
Contact sequence			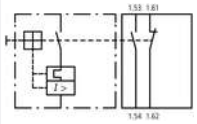
Connection technique			Screw terminals
For use with			PKZ0(4) standard auxiliary contacts
For use with			PKZM01 PKZM0 PKZM4 PKZM0-T PKM0 PKE

Notes Can be fitted to:
Motor protective circuit-breaker
Transformer-protective circuit-breaker
Motor protective circuit breaker for starter combinations
(From serial number 01)
45 mm (PKZM0 and PKZM01) or 55 mm (PKZM4) widths of the motor-protective circuit-breakers remain unchanged.

Technical data

Auxiliary contacts

Rated impulse withstand voltage	U_{imp}	V AC	4000
Overvoltage category/pollution degree			III/3
Rated operational voltage	U_e	V	
	U_e	V AC	440
	U_e	V DC	250
Safe isolation to EN 61140			
Between auxiliary contacts and main contacts		V AC	690
Rated operational current	I_e	A	
AC-15			
220 - 240 V	I_e	A	1
DC-13 L/R - 100 ms			
24 V	I_e	A	2
Lifespan		S	
Lifespan, mechanical	Operations	x 10^6	> 0.1

Lifespan, electrical	Operations	x 10^6	0.1
Control circuit reliability	Failure rate	λ	$<10^{-8}$, < one failure at 100 million operations (at U_e = 24 V DC, U_{min} = 17 V, I_{min} = 5.4 mA)
Short-circuit rating without welding			
Fuse		A gG/gL	10

Terminal capacities

Solid or flexible conductor, with ferrule		mm^2	0,75 - 1,5
Solid or stranded		AWG	18 - 16

Rating data for approved types

Pilot Duty			
AC operated			E150
General Use			
DC		V	250
DC		A	0.5

Design verification as per IEC/EN 61439

Technical data for design verification			
Rated operational current for specified heat dissipation	I_n	A	1
Heat dissipation per pole, current-dependent	P_{vid}	W	0.01
Equipment heat dissipation, current-dependent	P_{vid}	W	0
Static heat dissipation, non-current-dependent	P_{vs}	W	0
Heat dissipation capacity	P_{diss}	W	0
Operating ambient temperature min.		°C	-25
Operating ambient temperature max.		°C	55
IEC/EN 61439 design verification			
10.2 Strength of materials and parts			
10.2.2 Corrosion resistance			Meets the product standard's requirements.
10.2.3.1 Verification of thermal stability of enclosures			Meets the product standard's requirements.
10.2.3.2 Verification of resistance of insulating materials to normal heat			Meets the product standard's requirements.
10.2.3.3 Verification of resistance of insulating materials to abnormal heat and fire due to internal electric effects			Meets the product standard's requirements.
10.2.4 Resistance to ultra-violet (UV) radiation			Meets the product standard's requirements.
10.2.5 Lifting			Does not apply, since the entire switchgear needs to be evaluated.
10.2.6 Mechanical impact			Does not apply, since the entire switchgear needs to be evaluated.
10.2.7 Inscriptions			Meets the product standard's requirements.
10.3 Degree of protection of ASSEMBLIES			Does not apply, since the entire switchgear needs to be evaluated.
10.4 Clearances and creepage distances			Meets the product standard's requirements.
10.5 Protection against electric shock			Does not apply, since the entire switchgear needs to be evaluated.
10.6 Incorporation of switching devices and components			Does not apply, since the entire switchgear needs to be evaluated.
10.7 Internal electrical circuits and connections			Is the panel builder's responsibility.
10.8 Connections for external conductors			Is the panel builder's responsibility.
10.9 Insulation properties			
10.9.2 Power-frequency electric strength			Is the panel builder's responsibility.
10.9.3 Impulse withstand voltage			Is the panel builder's responsibility.
10.9.4 Testing of enclosures made of insulating material			Is the panel builder's responsibility.
10.10 Temperature rise			The panel builder is responsible for the temperature rise calculation. Eaton will provide heat dissipation data for the devices.
10.11 Short-circuit rating			Is the panel builder's responsibility. The specifications for the switchgear must be observed.
10.12 Electromagnetic compatibility			Is the panel builder's responsibility. The specifications for the switchgear must be observed.
10.13 Mechanical function			The device meets the requirements, provided the information in the instruction leaflet (IL) is observed.

Technical data ETIM 7.0

Low-voltage industrial components (EG000017) / Auxiliary contact block (EC000041)

Electric engineering, automation, process control engineering / Low-voltage switch technology / Component for low-voltage switching technology / Auxiliary switch block (ecl@ss10.0.1-27-37-13-02 [AKN342013])			
Number of contacts as change-over contact			0
Number of contacts as normally open contact			1
Number of contacts as normally closed contact			1
Number of fault-signal switches			0
Rated operation current Ie at AC-15, 230 V		A	1
Type of electric connection			Screw connection
Model			Top mounting
Mounting method			Front fastening
Lamp holder			None

Approvals

Product Standards			UL 508; CSA-C22.2 No. 14; IEC60947-4-1; CE marking
UL File No.			E36332
UL Category Control No.			NLRV
CSA File No.			165628
CSA Class No.			3211-05
North America Certification			UL listed, CSA certified
Specially designed for North America			No

Characteristics

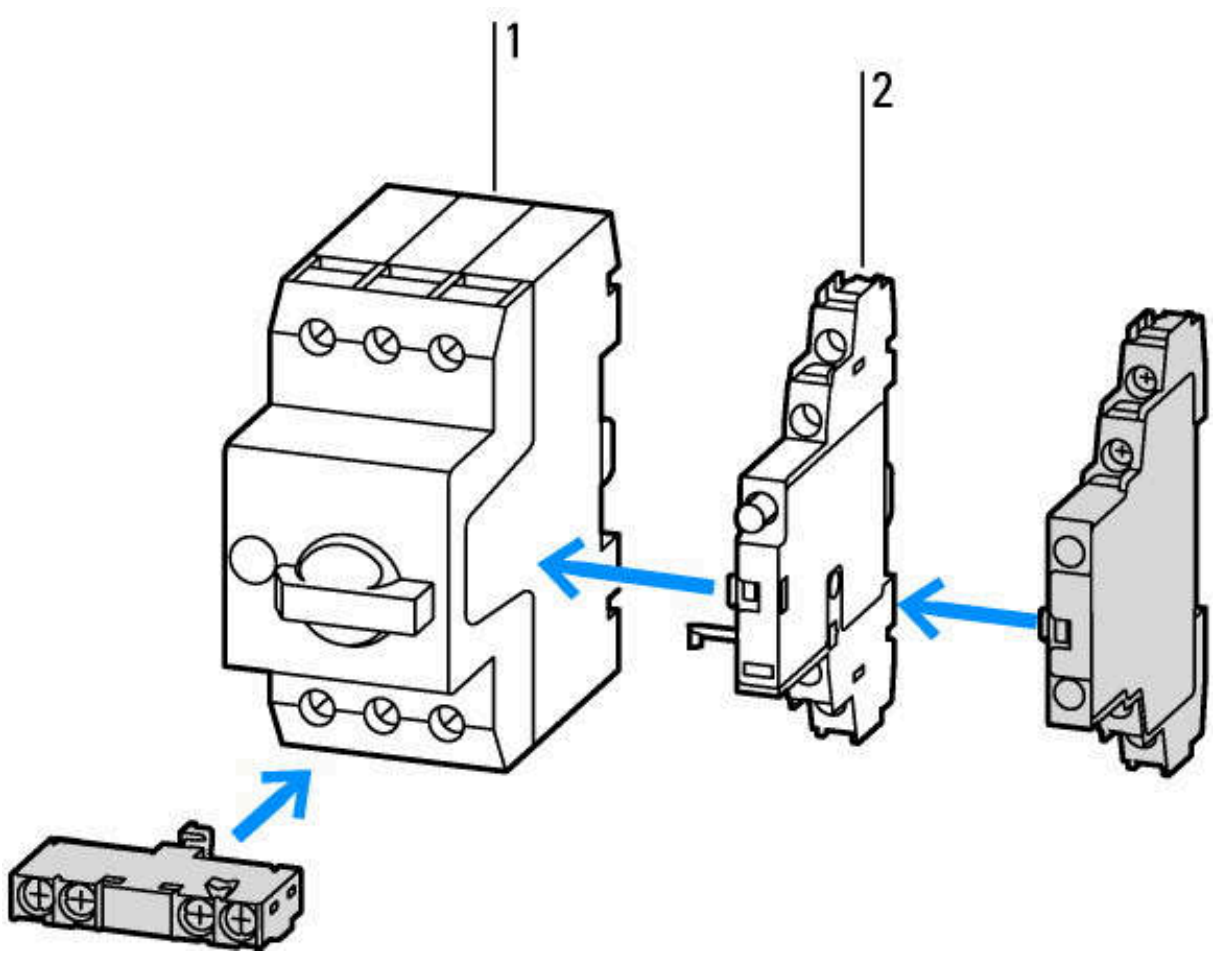

1: Motor-protective circuit-breakers
2: Trip-indicating auxiliary contact

Dimensions

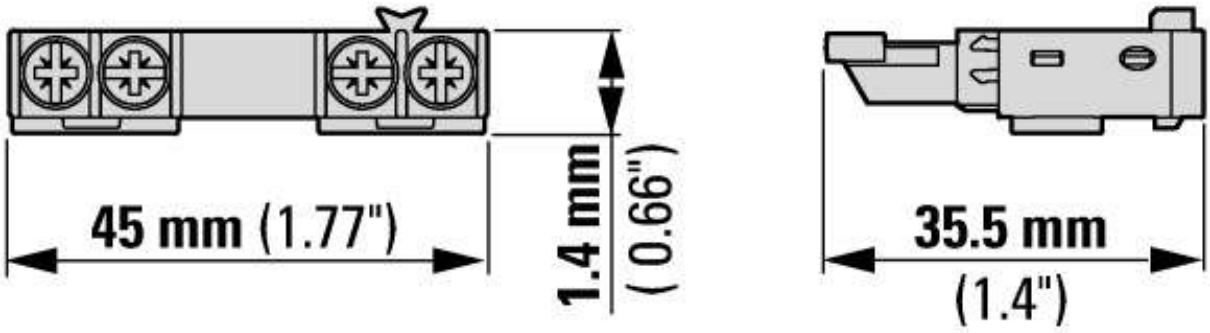

PKZM0-…(+NHI-E-…-PKZ0)
PKZM0-…-T(+NHI-E-…-PKZ0)
PKM0-…(+NHI-E-…-PKZ0)

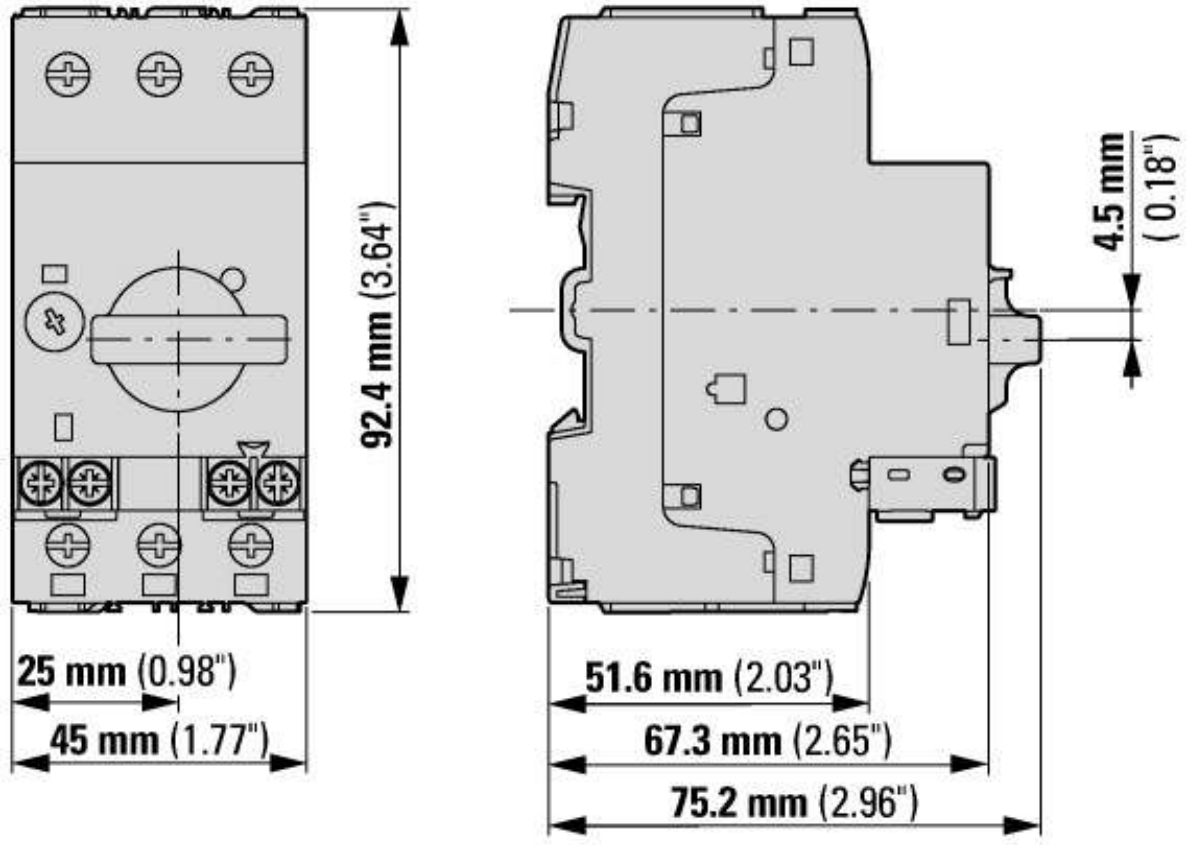

Assets (links)

Declaration of CE Conformity

00002871

Instruction Leaflets

IL03801004Z2018_12

© 10/2019 by Eaton Industries GmbH