Your Expert Partner for **Human Machine Interfaces**

Protection cover

Distribution by
Rs-online

45-548.1K00



https://rs-online.eao.com/component/45-548.1K...

Your product:



45-548.1K00
Protection cover

FRONT

Colour: Colourless

MECHANICAL CHARACTERISTICS

Weight: 0.014 kg

OTHER

Short Description: Protection cover, Silicone, transparent, Colourless

Titel Accessory: Protection cover

Material: Silicone

Product attributes: For double pushbutton

Optics: transparent

Dimension drawings:

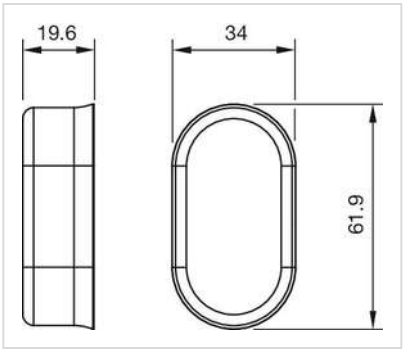

for Part No. 45-548.1K00