THE INFORMATION CONTAINED IN THIS DRAWING IS THE SOLE PROPERTY OF L-COM, INC. ANY REPRODUCTION IN PART OR WHOLE WITHOUT THE WRITTEN PERMISSION OF L-COM, INC. IS PROHIBITED.

REVISIONS			
REV	DESCRIPTION	DATE	APPROVED
A	INITIAL RELEASE	06/21/2011	BPUCHASKI
B	ECN 9475: REVISED GAS TUBE BREAKDOWN FROM 90V TO 180 V	10/25/2018	DFRISIELLO

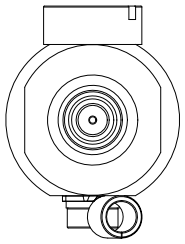

RP-SMA PLUG

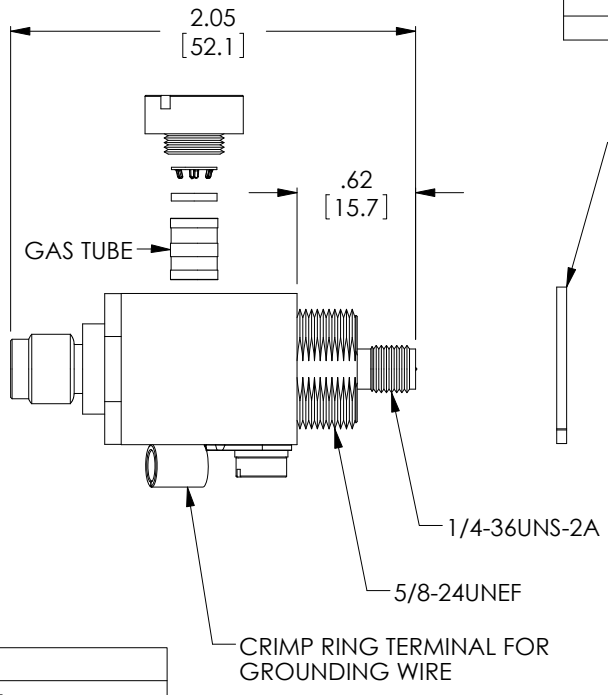

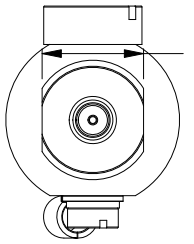

RP-SMA JACK

ELECTRICAL SPECIFICATIONS	
FREQUENCY RANGE	0 - 6 GHz
VSWR	1 : 1.2 MAX (0 - 6 GHz)
INSERTION LOSS	0.6 dB MAX (0 - 6 GHz)
IMPEDANCE	50 OHM
GAS TUBE BREAKDOWN VOLTAGE	180 V ± 20%
MECHANICAL SPECIFICATIONS	
CONNECTORS	RP-SMA PLUG TO RP-SMA JACK BULKHEAD
CONNECTOR BODY MATERIAL	NICKEL PLATED BRASS
BODY MATERIAL	NICKEL PLATED BRASS
PIN MATERIAL	GOLD PLATED BRASS
O''-RING	RUBBER
DIMENSIONS (MAX)	2.1 X 0.9 X 1.2 IN (53 X 23 X 31mm)
WEIGHT	0.25 LBS (0.11 kg)

B

NOTES:

1. LIGHTNING PROTECTOR SHALL BE INDIVIDUALLY PACKAGED IN ACCORDANCE WITH L-COM PACKAGING SPEC. PS-0031.

REGULATORY COMPLIANCE:
CE2011/65/EU(RoHS DIRECTIVE)

UNLESS OTHERWISE SPECIFIED,
DIMENSIONS ARE IN INCHES [mm]
OVERALL CABLE LENGTH TOLERANCE:
≤12 [305] = +1 [25] / -0
>12 [305] ≤60 [1524] = +2 [51] / -0
>60 [1524] ≤120 [3048] = +4 [102] / -0
>120 [3048] ≤300 [7620] = +6 [152] / -0
>300 [7620] = +5% / -0%
ALL OTHER DIMENSIONAL TOLERANCES:
.X = ± .2 [5.08]
.XX = ± .02 [.51]
.XXX = ±.005 [.13]
PROJECTION

APPROVALS	DATE
DRAWN BY BPUCHASKI	06/21/2011
CHECKED BY K.BURGNER	06/21/2011
APPROVED BY K.BURGNER	06/21/2011

CONFIGURATION DETAILS OF UNDIMENSIONED FEATURES MAY VARY

COLOR VARIATIONS MAY OCCUR

L-COM Global Connectivity
50 HIGH STREET
NORTH ANDOVER, MA
01845

CATEGORY
LIGHTNING PROTECTOR

PRODUCT DESCRIPTION
LP, RP-SMA P TO RP-SMA J 0-6GHz

SIZE	FSCM NO.	DWG. NO.	REV.
A	43321	AL6-RSPRSJBW-9	B

SCALE: NONE | CAD FILE: AL6-RSPRSJBW-9.SLDDRW | SHEET 1 OF 1