THE INFORMATION CONTAINED IN THIS DRAWING IS THE SOLE PROPERTY OF L-COM, INC. ANY REPRODUCTION IN PART OR WHOLE WITHOUT THE WRITTEN PERMISSION OF L-COM, INC. IS PROHIBITED.

RoHS Compliant ✔

REVISIONS			
REV	DESCRIPTION	DATE	APPROVED
A	INITIAL RELEASE	2/1/11	D.GRIFFIN
-	-	-	-

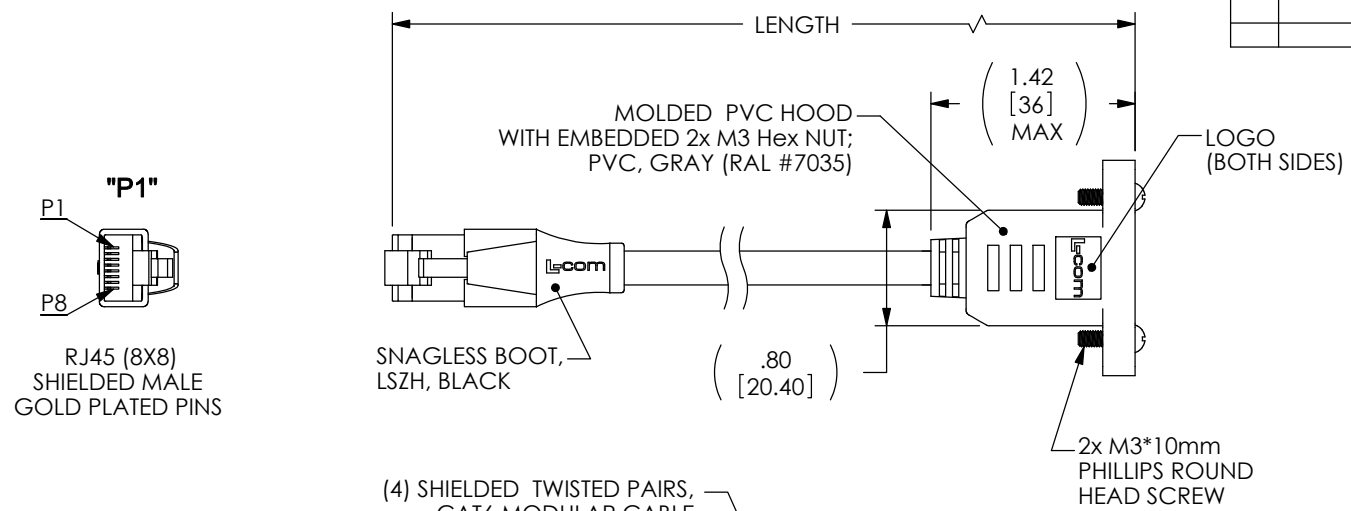

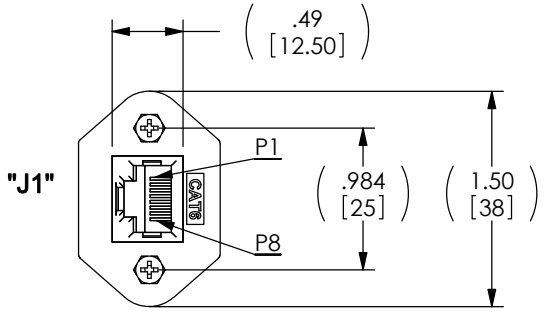

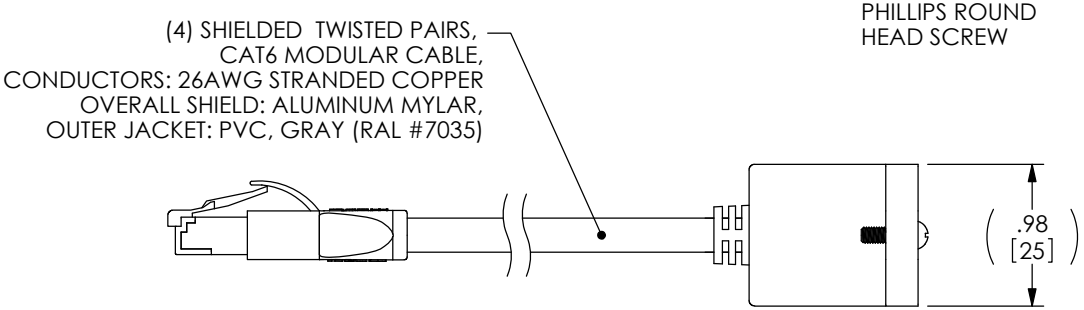

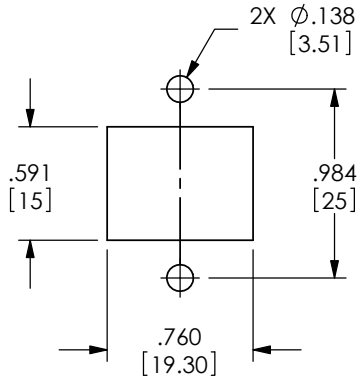

WIRING MAP

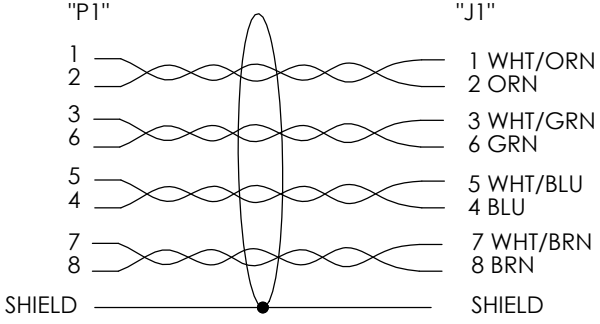

PART NUMBER	LENGTH	
	FEET	[METERS]
TRDC6EXTSF-3	3.0	[.91]
TRDC6EXTSF-5	5.0	[1.52]
TRDC6EXTSF-7	7.0	[2.13]
TRDC6EXTSF-10	10.0	[3.05]
TRDC6EXTSF-15	15.0	[4.57]
TRDC6EXTSF-25	25.0	[7.62]

NOTES:

1. MODULAR CONNECTOR TO MEET TIA-1096.
2. CABLE ASSEMBLY TO BE SHIPPED WITH (2) M3 X 10mm LONG PHILLIPS ROUND HEAD SCREWS
3. CABLE ASSEMBLY SHALL BE TESTED FOR CONTINUITY.
4. CABLE ASSEMBLY SHALL BE INDIVIDUALLY PACKAGED IN ACCORDANCE WITH L-COM SPEC. PS-0031.

UNLESS OTHERWISE SPECIFIED,
DIMENSIONS ARE IN INCHES [mm]
OVERALL CABLE LENGTH TOLERANCE:
≤12 [305] = +1 [25] / -0
>12 [305] ≤60 [1524] = +2 [51] / -0
>60 [1524] ≤120 [3048] = +4 [102] / -0
>120 [3048] ≤300 [7620] = +6 [152] / -0
>300 [7620] = +5% / -0%
ALL OTHER DIMENSIONAL TOLERANCES:
.X = ± .2
.XX = ± .02
.XXX = ±.005
PROJECTION

APPROVALS	DATE
DRAWN BY D. CASTRO	1/25/11
CHECKED BY D. PARHAM	1/26/11
APPROVED BY D. GALLAGHER	1/31/11

CONFIGURATION DETAILS OF UNDIMENSIONED FEATURES MAY VARY

COLOR VARIATIONS MAY OCCUR

REF

L-COM Global Connectivity
45 BEECHWOOD DRIVE
NORTH ANDOVER, MA
01845

CATEGORY
TELECOM/MODULAR

PRODUCT DESCRIPTION
CA C6 RJ45 M/F FLANGED EXTENSION SHLD

SIZE	FSCM NO.	DWG. NO.	REV.
A	43321	TRDC6EXTSF	A

SCALE: NONE | CAD FILE: TRDC6EXTSF.SLDDRW | SHEET 1 OF 1