JUMO GmbH & Co. KG

Delivery address: Mackenrodtstraße 14,
36039 Fulda, Germany
Postal address: 36035 Fulda, Germany
Phone: +49 661 6003-0
Fax: +49 661 6003-607
e-mail: mail@jumo.net
Internet: www.jumo.net

JUMO Instrument Co. Ltd.

JUMO House
Temple Bank, Riverway
Harlow, Essex CM 20 2TT, UK
Phone: +44 1279 635533
Fax: +44 1279 635262
e-mail: sales@jumo.co.uk
Internet: www.jumo.co.uk

JUMO PROCESS CONTROL INC.

885 Fox Chase, Suite 103
Coatesville PA 19320, USA
Phone: 610-380-8002
1-800-554-JUMO
Fax: 610-380-8009
e-mail: info@JumoUSA.com
Internet: www.JumoUSA.com

JUMO di eco
Digital Indicator

76mm x 36mm format

Brief description

The JUMO di eco compact digital indicator is used for the simple visualization of temperatures or standard signals. The measurement input permits the connection of resistance thermometers or thermocouples, or standard current or voltage signals. The measured value is shown on a 3-digit backlit display.
Limit infringements are monitored by means of a 10A relay (changeover contact) and indicated by an LED.
The 3 keys on the front panel can be used to configure, among others, the switching hysteresis and alarm suppression.
The electrical connection is made via screw terminals on the back of the instrument.
A setup program and a PC interface are available as accessories, for simple configuration and parameterization from a PC.



Type 701540/...

Block structure

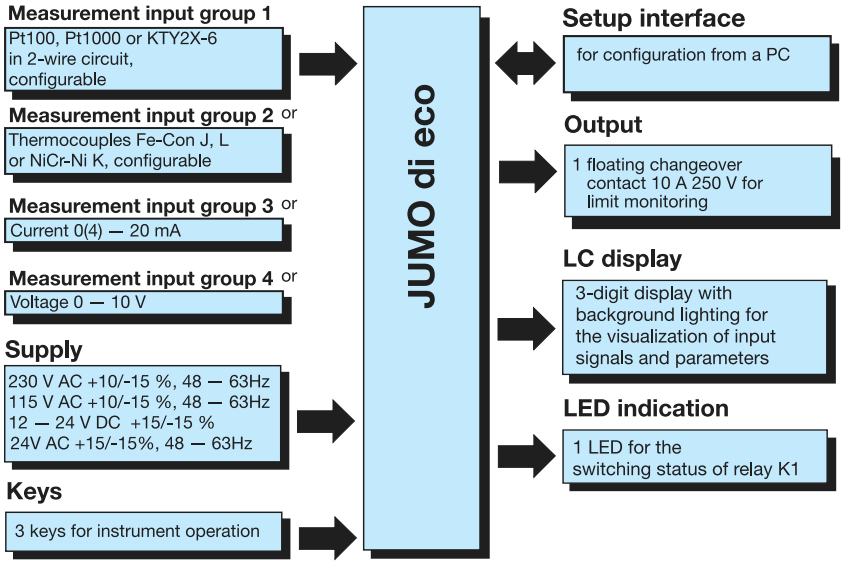

Key features

- Limit monitoring
- Available for resistance thermometer, thermocouple, standard current or voltage signals, according to choice
- 10A relay (changeover contact)
- Adjustable switching hysteresis
- Programmable switch-on delay after power-on
- Configurable alarm suppression
- Symbols in display for temperature unit, minutes and seconds
- Parameter level protected by code
- Setup program for configuration and archiving via PC
- Customized linearization via tabular function in the setup program
- UL approval

Displays and controls

LC display	3-digit segment display, 13 mm high, and symbols for temperature unit, h, min and s, with red background lighting
Status indication	LED K1 flashes during alarm suppression LED K1 lights up when limits are infringed, or on a probe error
Keys	(P) programming (▲) increase parameter value (▼) decrease parameter value (P) + (▲) version display (P) + (▼) exit, jump to basic status (temperature indication)
Setup interface	The instrument is linked to the PC via a PC interface with TTL/RS232 converter and adapter (3-pin).

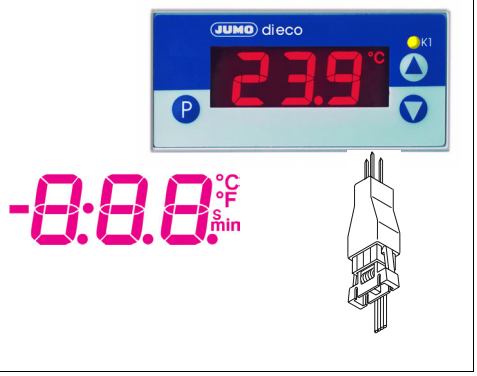

Technical data

Measurement input	Designation	Measuring range	Meas. accuracy[1]/ ambient temperature error	Recognition of ...	
				Probe short-circuit	Probe break
Resistance thermometer	Pt100 EN 60 751	-200 to +600 °C	0.1 %/ ≤100 ppm/°C	is recognized	is recognized
	Pt1000 EN 60 751	-200 to +600 °C	0.1 %/ ≤100 ppm/°C	is recognized	is recognized
	KTY2X-6 (PTC)	-50 to +150 °C	1 %/ ≤100 ppm/°C	is recognized	is recognized
	Resistance 0 — 3000 Ω	customer table [3]	0.1 %/ ≤100 ppm/°C [3]	= 0Ω	is recognized
Measuring current for Pt100: 0.2 mA, for Pt1000, KTY2X-6 and resistance: 0.02 mA					
Lead compensation is adjustable via the parameter Lead compensation resistance OF.r The total resistance (sensor+lead) must not exceed 320Ω for Pt100 and 3200Ω for Pt1000, KTY2X-6 or resistance.					
Thermocouple	Fe-Con J EN 60 584	-200 to +999 °C	0.4 %/ ≤100 ppm/°C [2]	-	is recognized
	Fe-Con L DIN 43 710	-200 to +900 °C	0.4 %/ ≤100 ppm/°C [2]	-	is recognized
	NiCr-Ni K EN 60 584	-200 to +999 °C	0.4 %/ ≤100 ppm/°C [2]	-	is recognized
	-10 to 60 mV	customer table [3]	0.1 %/ ≤100 ppm/°C [3]	-	is recognized
For the voltage input (-10 to 60 mV), terminal temperature compensation can be used for thermocouples. Internal terminal temperature compensation can be switched off via the setup program (0°C).					
Current	0 — 20 mA	-2 to 22 mA scalable with SCL and SCH or customer table	0.1 %/ ≤100 ppm/°C [3]	-	-
	4 — 20 mA	2.4 to 21.6 mA scalable with SCL and SCH	0.1 %/ ≤100 ppm/°C [3]	is recognized	is recognized
Input resistance R_{IN} ≤ 3Ω					
Voltage	0 — 10 V	-1 to 11 V scalable with SCL and SCH or customer table	0.1 %/ ≤100 ppm/°C	-	-
Input resistance R_{IN} ≥ 100kΩ					

1.) The accuracies refer to the measuring range span.
2.) valid from -50°C
3.) A valid customer table must be entered via the setup program and switched over to tAb in the instrument.
This may reduce the measuring accuracy.

Additional data

Sampling time	250 msec
Input filter	1st order digital filter; filter constant dF adjustable from 0.1 — 99.9 sec
Measurement offset	adjustable from -99.9 to +99.9 via the parameter OF.t
Special features	display of temperature unit: °C, °F (Fahrenheit) or switched off
Customer table	The setup program acquires a maximum of 20 value pairs and uses them for the linear interpolation of 20 new calibration points.

Ambient conditions

Ambient temperature range	0 to +55 °C
Ambient temperature range with side-by-side mounting	0 to +40 °C
Storage temperature range	-40 to +70 °C
Temperature drift	≤100 ppm/°C of measuring range
Climatic conditions	≤75 % rel. humidity, no condensation
Cleaning and care of front panel	The front panel can be cleaned with all the usual cleaning and rinsing agents. Do not use solvents such as methylated spirit, white spirit, P1 or xylene!

Output

Relay	150,000 operations at 10A 250V AC 50Hz resistive load

Supply

Supply voltage	230V AC +10/-15 %, 48 — 63Hz or 115V AC +10/-15 %, 48 — 63Hz (isolated from measurement input)
	12 — 24V DC +15/-15 %, 24V AC +15/-15%, 48 — 63Hz (not isolated from measurement input)
Power consumption	<3VA

Housing

Material	polycarbonate
Mounting	in panel cut-out with bezel seal
Operating position	unrestricted
Weight	approx. 160 g
Protection	front IP65, rear IP20
Flammability class	UL 94 V0

Electrical data

Data backup	EEPROM
Connection	via screw terminals for wire cross-sections up to 4 mm^2 solid wire and 2.5 mm^2 stranded wire
EMC - interference emission - immunity to interference	EN 61 326 Class B to industrial requirements
Operating conditions	The instrument is designed as a panel-mounting unit.
Electrical safety	to EN 61 010, Part 1 overvoltage category III, pollution degree 2

Connection diagram

Type 701540/XX1-31: Measurement input and supply voltage are not isolated from each other!

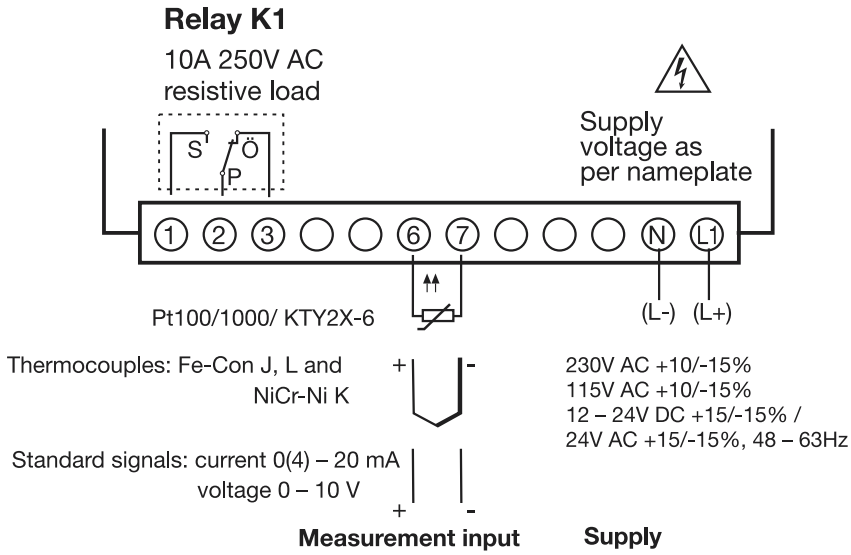

Dimensions

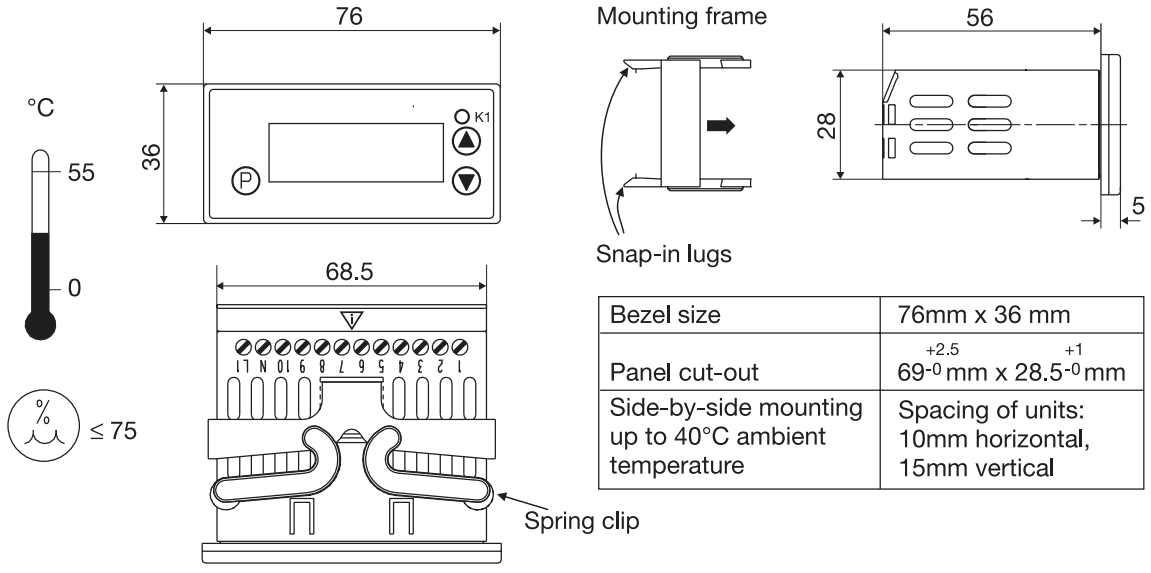

Bezel size	76mm x 36 mm
Panel cut-out	$69^{+2.5}_{-0}$ mm x 28.5^{+1}_{-0} mm
Side-by-side mounting up to 40°C ambient temperature	Spacing of units: 10mm horizontal, 15mm vertical

Order details

		(1) Basic version
701540/		JUMO di eco
		(2) Basic type extension
		Version
	8	factory-set, configurable within the measurement input group
	9	configured to customer specifications
		Measurement input group[1]
	1	Pt100 in 2-wire circuit
		Pt1000 in 2-wire circuit
		KTY2X-6
	2	Fe-Con J
		Fe-Con L
		NiCr-Ni K
	3	0 — 20 mA
		4 — 20 mA
	4	0 — 10 V
	1	1 relay (changeover contact 10A 250V)
		(3) Supply
	02	230V AC +10/-15% 48 — 63Hz
	05	115V AC +10/-15% 48 — 63Hz
	31	12 — 24V DC +15/-15% /
		24V AC +15/-15% 48 — 63Hz
		(4) Approvals
	000	none
	061	Underwriters Laboratories Inc. (UL)

	(1)		(2)		(3)		(4)
Order code		/		-		-	
Order example	701540	/	811	-	02	-	000

factory-set

1.) It is not possible to switch from one meas. input group to another

Standard accessories

- 1 Operating Manual B 70.1540.0
- 1 mounting frame
- 1 bezel seal

Accessories

Setup program, multilingual
PC interface with TTL / RS232C converter and adapter (pins)

Suitable transducers can be found in these data sheets:

- 90.2005 Push-in resistance thermometers
- 90.2105 Screw-in resistance thermometers
- 90.1002 and subsequent ones for screw-in thermocouples
- 90.1101 and subsequent ones for push-in thermocouples
- 90.1221 Mineral-insulated thermocouples

