2700 Series

Cam Action Overhead Closer

Introduction

Briton 2700 series is a precision manufactured cam action, slide channel door closer, in a compact surface mount fixed unit. It provides expectational ease of use by reducing the resistance encountered when opening the door.

Capable of meeting BS8300, the Briton 2700 series bridges the gap between the requirements for fire and smoke control and ease of operation required for accessibility.



2720BD.T.S.SSS with Softline cover

Features & Functions

- Adjustable power size EN 2-5
- High efficiency cam action technology provides reliable closing for fire door applications and easy operation for accessibility
- Capable of meeting BS8300 requirements for use on accessible routes
- Adjustable closing speed and FAST Power Adjust dial feature allows easy power adjustment to suit door conditions
- Certified built-in backcheck, delayed action and optional hold-open functions
- Unique self-adhesive 'Accufit' installation template and mounting plate with dowel fixing to position the closer body ensures a quick, simple and accurate installation
- Softline cover has a 'push and click' fit secured by spring-clips for quick installation and no visible fixings

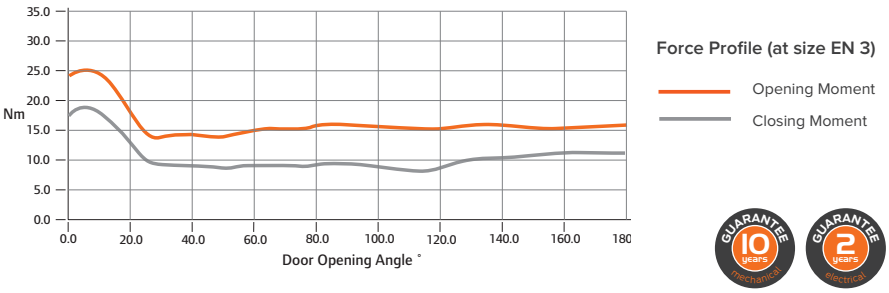

Certification

UKCA Marked to EN 1154 (1121-CPR-UK-AD7603)

UKCA Marked to EN 1155 (1121-CPR-UK-AE7611) for electromagnetic variants

CE Marked to EN 1154 (2812-CPR-AD0264)

CE Marked to EN 1155 (2812-CPR-AE0023) for electromagnetic variants

Certifire Approved (CF738)

Fire tested to EN 1634-1 for use on fire doors up to 2hr timber and 1hr steel doors *[* May be fitted to fully insulated steel based doorsets or uninsulated steel based doorsets where the closer is fitted to the fire risk face only].*

Environmental Product Declaration in accordance with ISO 14025 & EN 15804

DoP available at www.britondops.co.uk

Allegion (UK) Limited
35 Rocky Lane, Aston, Birmingham B6 5RQ
T: +44 (0) 330 8080 617
E: contactuk@allegion.com

Briton

DOOR CONTROLS

Cam Action Overhead Closer Briton 2700 Series

Product features	Product references			
	2720BD.T	**2721BD.T**	**2720BD.TE**	**2721BD.TE**
Pull side door mount / Push side transom mount	■		door mount pull only	
Push side door mount / Pull side transom mount		■		door mount push only
Variable closing power EN size	2 - 5 (door mount) 2 - 4 (transom mount)	2 - 5 (door mount) 2 - 4 (transom mount)	3 - 5	3 - 5
Door limits (width/weight)	1250/100kg	1250/100kg	1250/100kg	1250/100kg
FAST power adjust dial	■	■	■	■
Accufit template & Accufit mounting plate	■	■	■	■
Maximum angle of opening (pull side)	180˚ (door mount) 180˚ (transom mount)	180˚ (door mount) 180˚ (transom mount)	120˚	120˚
Separate closing speed & latch action adjustment	■	■	■	■
Adjustable backcheck	■	■	■	■
Adjustable delayed action*	■*	■	■	■
Mechanical hold-open facility	□	□		
Electromagnetic hold-open facility			■	■
Matching slide channel, arm & cover finish	■	■	■	■
Finishes available	SSS; SES			
Warranty period	10yrs	10yrs	10yrs mechanical / 2yrs electrical	
* except push side transom mount				
UKCA & CE Classification	4 8 2-5 1 1 3 (door mount) 3 8 2-4 1 1 3 (transom mount)	4 8 2-5 1 1 3 (door mount) 3 8 2-4 1 1 3 (transom mount)	3 8 3-5 1 1 3	

■ Standard □ Available as an option/variant

Accessories & Parts	
2720.CPS	Cover pack
2720.EPS	Track end caps & bracket pack
2720.FP	Fixing pack
2720.HP	Hold open conversion pack
2720.NS	Nylon slide
2720.T.A.P	Track arm pack
2721.DVP	Transom angle mounting bracket
2720BD.T.M	Door closer mechanism for Briton 2720
2721BD.T.M	Door closer mechanism for Briton 2721

Finishes

All finish variants are supplied with matching arm and slide track.

Additional finishes available on request.

SES
Sprayed silver

SSS
Satin stainless steel

Briton

DOOR CONTROLS

2700 Series

Cam Action Overhead Closer Briton 2700 Series

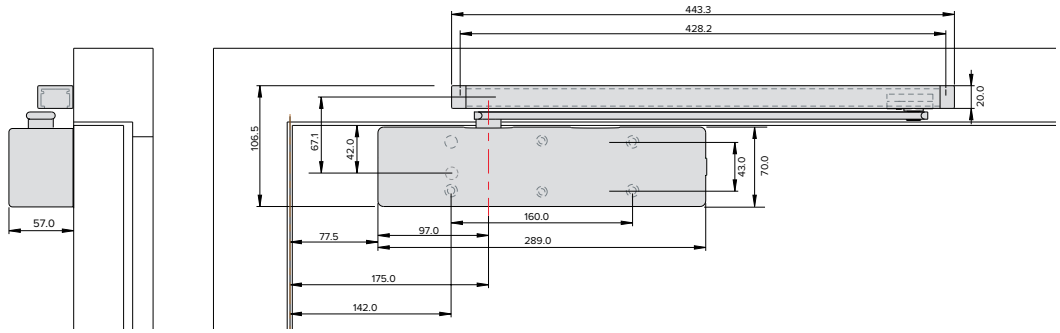

Standard closers with/without mechanical hold open (door mounted - pull side shown).

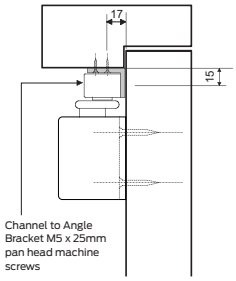

2721.DVP
mounting bracket

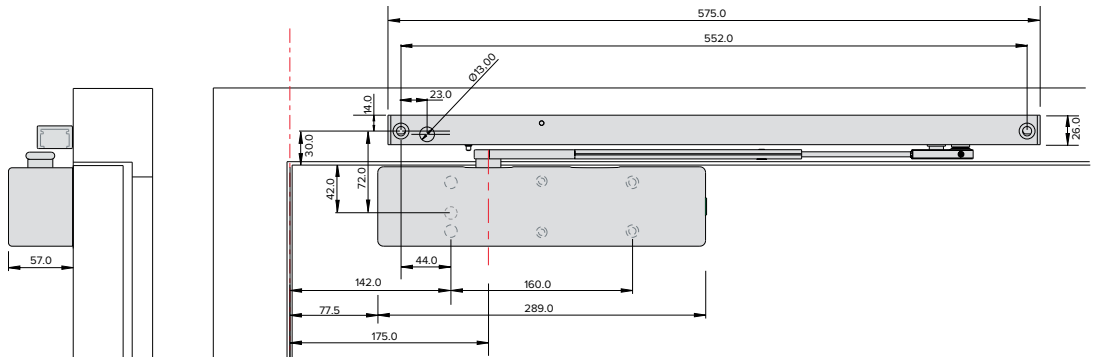

Electromagnetic hold-open variant (all other dimensions as standard closer)

Briton 2720BD.T - door mounted pull side

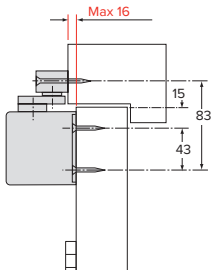

Briton 2720BD.T - transom mounted push side

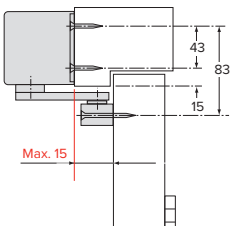

Briton 2721BD.T - door mounted push side

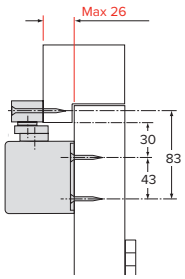

Briton 2721BD.T - transom mounted pull side

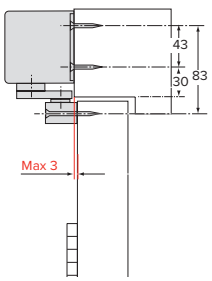

All dimensions are in mm

Allegion (UK) Limited
35 Rocky Lane, Aston, Birmingham B6 5RQ
T: +44 (0) 330 8080 617
E: contactuk@allegion.com

ALLEGION™

www.briton.co.uk

General Maintenance

2700 Series

Door controls

Allegion has identified that many problems associated with overhead door closers can be attributed directly to errors in installation rather than problems with the door closer itself. If the door is not closing properly into the frame you should first disconnect the door closer (disconnect the arm(s)) and determine that there is not an underlying problem with the door, frame or any smoke /draft seals that might be fitted.

PLEASE NOTE:

The power of the door closer should not be used to overcome problems associated with the door or other items of hardware fitted to it.

Under no circumstances should the closer body be dismantled.

Types of maintenance

Much of the routine maintenance recommended consists of a combination of visual and mechanical checks, cleaning and lubrication. Look out for the icons opposite which provide a 'quick glance' reminder of the maintenance required.

Visual checks

Primarily making a visual check on the product and surrounding door/frame looking for wear, damage, and general condition.



Functional checks

Consists of checking that the product operates properly ensuring the door can fully close without any binding or undue force required. Check that any seals or weatherstripping do not inhibit correct operation of the door



Check fixings

Fixings need to be checked regularly and tightened when necessary. Check that no projection of fixings prevents the door from swinging freely.



Lubricating

Some products will benefit from periodic lubrication using a light machine oil or as instructed.



Cleaning

Build up of grease, dust and harmful chemicals should be removed to prevent corrosion and maintain the product finish.



Allegion (UK) Limited
35 Rocky Lane, Aston, Birmingham B6 5RQ
T: +44 (0) 330 8080 617
E: contactuk@allegion.com

Closer Maintenance

WEEKLY

Release the door from the fully open position and ensure that it closes fully into the frame. Ensure the latch (if fitted) engages fully into the strike plate. Repeat the process a few times from different angles of opening to ensure the door closes consistently each time.



Check and adjust the closing and latching speeds if necessary.

Check the backcheck comes into operation at the desired angle and readjust if necessary.

Check the delayed action and adjust the time delay if necessary.

Check that the door or hardware does not come into contact with the door frame or the surrounding structure.



QUARTERLY

The fixings of the closer body and the slide track are subject to stress and should be checked carefully to make sure they are tight.



Periodically apply a little light machine oil to the moving joints of the arm and slide track.



Check any fire and smoke seals to ensure they do not foul the action of the door.



Check for any loss of fluid from the door closer body which would indicate a failing device.

Clean the closer body, arms and track if necessary following the guidance on “Care of Finishes” on page 16 of the ‘Service & Maintenance Guide’.



FIRE DOOR APPLICATIONS

When installed as part of a fire precaution system the door closing mechanism, including the door selector if used on a double door arrangement, should be checked in accordance with standing periodic fire testing procedures.

Electromagnetic hold-open units should be tested weekly in accordance with the procedures described in the “fire precautions (workplace) regulations 1997” or the “fire precautions (workplace) (amendment) regulations 1999”.

Routinely check that all fixings of the closer body and track are tight.

Routine care of finishes as necessary.