a2A4200-40ucBAS

The a2A4200-40ucBAS Basler ace 2 USB 3.0 camera with a Gpixel GMAX2509 color CMOS sensor delivers 40 frames per second at 9 MP resolution.



Specifications

General Specifications

	a2A4200-40ucBAS
Resolution (H x V Pixels)	4200 x 2160
Sensor Type	GMAX2509-BVC-NLT-AU1 Progressive scan CMOS Global shutter
Sensor Format	2/3"
Effective Sensor Diagonal	12.5 mm
Pixel Size (H x V)	2.5 µm x 2.5 µm

	a2A4200-40ucBAS
Frame Rate (at Default Settings)	39.6 fps 42.9 fps (Device Link Throughput Limit mode set to Off)
Mono / Color	Color
Image Data Interface	USB 3.0, nominal max. 5 Gbit/s (SuperSpeed)
Pixel Formats	See Pixel Format.
Synchronization	Via hardware trigger Via software trigger Via free run
Exposure Time Control	Via hardware trigger Programmable via the camera API
Camera Power Requirements	≈tbd W (typical) @ 5 VDC
I/O Lines	1 opto-coupled input line 2 general purpose I/O (GPIO) lines
Lens Mount	C-mount
Size (L x W x H)	36.3 mm x 29 mm x 29 mm (without lens mount or connectors) 48.1 mm x 29 mm x 29 mm (with lens mount and connectors)
Weight	<85 g
Conformity	CE (includes RoHS), EAC, UL (in preparation), FCC, GenICam, USB3 Vision, IP30 Certificates for your camera model For more information, see the Compliance section of the Basler website.

	a2A4200-40ucBAS
Software	Basler pylon Camera Software Suite (version 6.0 or higher) Available for Windows, Linux x86, Linux ARM, macOS, and Android
Accessories	Cables for your camera model Lenses for your camera model Additional accessories for your camera model

IR Cut Filter

Color cameras are equipped with an IR cut filter. The filter is mounted in a filter holder inside the lens mount.

The IR cut filter has the following spectral characteristics:

Wavelength [nm]	Transmittance
450–610	T_{min} > 90 %
450–620	T_{avg} > 93 %
645 ± 10	T = 50 %
700–1070	T_{max} < 4 %
690–1070	T_{avg} < 1 %

The filter holder can be removed. For more information, see the ace IR Cut Filter Holder Removal Procedure application note.

Mechanical Specifications

Camera Dimensions and Mounting Points

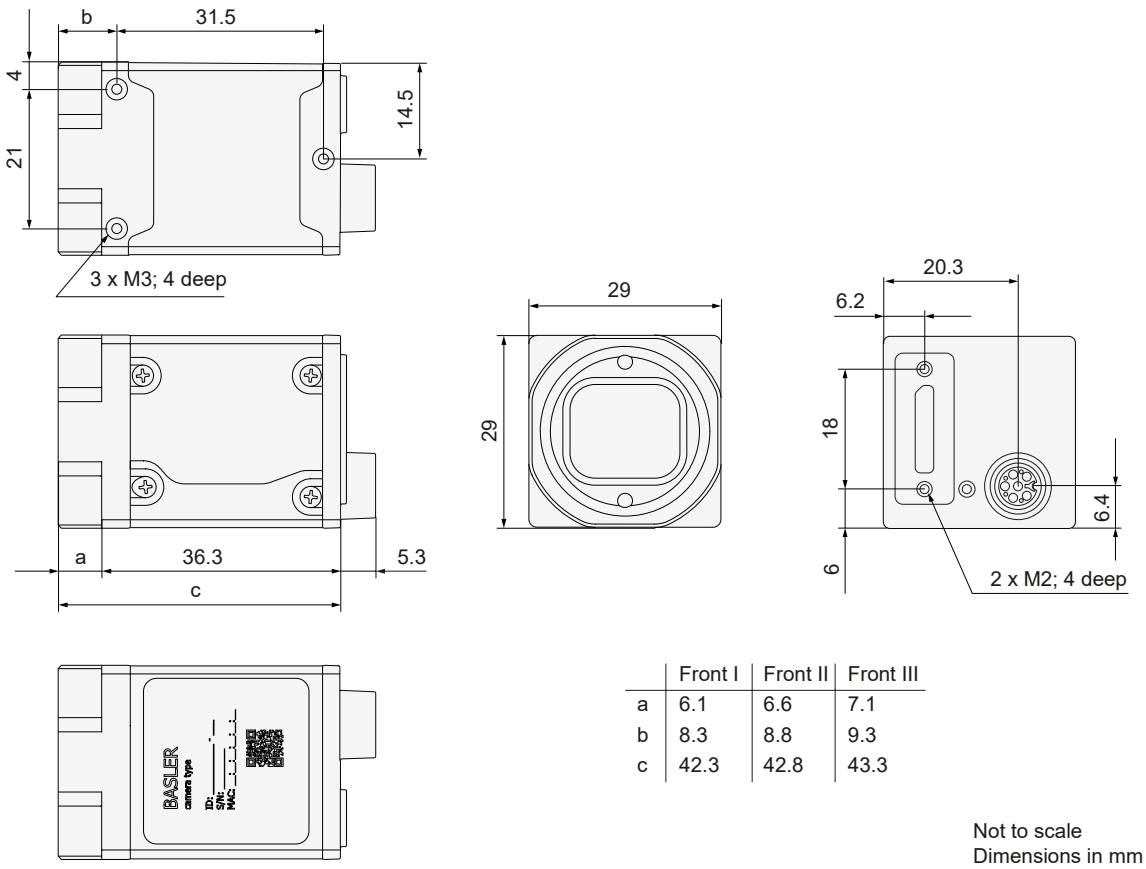

	Front I	Front II	Front III
a	6.1	6.6	7.1
b	8.3	8.8	9.3
c	42.3	42.8	43.3

Not to scale
Dimensions in mm

→ Download the CAD/technical drawing for your Basler camera.

Info

This camera is equipped with Front II.

Maximum Allowed Lens Intrusion

→ See Maximum Allowed Lens Intrusion.

Mounting Instructions

→ See Mounting Instructions (ace 2).

Stress Test Results

→ See Stress Test Results.

Requirements

Environmental Requirements

Temperature and Humidity

Housing temperature during operation	-10–60 °C (14–140 °F)
Humidity during operation	20–80 %, relative, non-condensing
Storage temperature	-20–80 °C (-4–176 °F)
Storage humidity	20–80 %, relative, non-condensing
Housing temperature according to UL 62368-1	max. 70 °C (158 °F)
Ambient temperature according to UL 62368-1	max. 30 °C (86 °F)

Heat Dissipation

→ See Providing Heat Dissipation (ace, ace 2).

Electrical Requirements

WARNING – Electric Shock and Fire Hazard / Risque de choc électrique et d'incendie

Unapproved power supplies may cause electric shock or fire or both. Serious injury or death may occur.

- You must use power supplies that meet the Safety Extra Low Voltage (SELV) and Limited Power Source (LPS) or the Electrical Source 1 (ES1) and Power Source 2 (PS2) requirements.
- If you use a powered hub or powered switch, they must meet the above requirements.

Les blocs d'alimentation non approuvés peuvent causer des décharges électriques ou des départs de feu, ou les deux. Celles-ci représentent un risque de mort ou de blessure grave.

- Vous devez utiliser un bloc d'alimentation conforme aux exigences Safety Extra Low Voltage (SELV) et Limited Power Source (LPS) ou Electrical Source 1 (ES1) et Power Source 2 (PS2).
- Si vous utilisez un hub alimenté ou un switch alimenté, ils doivent être conformes aux exigences ci-dessus.

NOTICE – Incorrect voltage can damage the camera.

You must supply camera and I/O power within the safe operating voltage ranges specified below.

Do not use negative voltage for an I/O line.

Camera Power

You must supply camera power that complies with the Universal Serial Bus 3.0 specification.

The camera's nominal operating voltage is 5 VDC, effective on the camera's connector.

Opto-Coupled I/O Input Line

Voltage	Description
30 VDC	Absolute maximum. This voltage must never be exceeded. Doing so may damage the camera and voids the warranty.

Voltage	Description
0– 24 VDC	Safe operating range.
0– 1.4 VDC	Indicates a logical 0 (with inverter disabled).
>1.4– 2.2 VDC	Region where the logic level transition occurs; the logical state is not defined in this region.
>2.2 VDC	Indicates a logical 1 (with inverter disabled).

- **Input current (high-level):** <15 mA internally limited
- **Input current (high-level):** >5 mA required to drive the opto-coupler

General Purpose I/O Lines

NOTICE: Applying incorrect electrical signals to the camera's GPIO line can severely damage the camera.

Before you connect any external circuitry to the GPIO line, use the Line Mode feature to configure the line for input or output.

Make sure to apply appropriate input or output signal voltages as specified below.

Operation as Input

Voltage	Description
30 VDC	Absolute maximum. This voltage must never be exceeded. Doing so may damage the camera and voids the warranty.
0–5 VDC	Safe operating range. The minimum external pull-up voltage is 3.3 VDC.
0– 0.8 VDC	Indicates a logical 0 (with inverter disabled).

Voltage	Description
>0.8–2.0 VDC	Region where the logic level transition occurs; the logical state is not defined in this region.
>2.0 VDC	Indicates a logical 1 (with inverter disabled).

- **Input current (high-level):** <100 µA
- **Input current (low-level):** <5 mA sink current from the GPIO input line without exceeding 0.8 VDC.

Operation as Output

Voltage	Description
30 VDC	Absolute maximum. This voltage must never be exceeded. Doing so may damage the camera and voids the warranty.
3.3–24 VDC	Safe operating range.
<3.3 VDC	Unreliable GPIO output.

- **Internal pull-up resistor:** ≈650 Ω, with open collector. Many applications will have to provide an additional pull-up resistor.
- **Residual voltage ("on" state):** ≈0.4 V at 50 mA and 25 °C (77 °F) housing temperature. Actual residual voltage depends on operating temperature, load current, and production spread of electronic components.
- **Leakage current:** <60 µA. Actual leakage depends on operating temperature and production spread of electronic components.
- **Maximum load current:** 50 mA
- **Minimum load current:** Not specified. Consider the following:
  - Leakage current will have a stronger effect when load currents are low.
  - Propagation delay of the output increases as load currents decrease.
  - Higher-impedance circuits tend to be more susceptible to EMI.
  - Higher currents cause higher voltage drops in long cables.

For more information about the I/O lines, see the I/O Control section.

Circuit Diagrams

→ See Circuit Diagrams (ace 2, boost).

Cable Requirements

USB 3.0 Cable

- Use a high-quality USB 3.0 cable with a Micro-B plug.
- To avoid EMI, cables must be shielded, as specified in the USB 3.0 standard.
- Basler recommends using USB 3.0 cables from the Basler Vision Components range.

For more information about recommended USB 3.0 cables, see the Recommended Accessories for Basler USB 3.0 Cameras document.

I/O Cable

- The I/O cable must be shielded.
- The I/O cable must have a cross-section at least 0.14 mm² (close to AWG26).
- Use twisted pair wire cables.
- Maximum recommended cable length: 10 m
- Camera-side connector: M8 6-pin male, coding A-standard, according to IEC 61076-2-104
- Proximity to strong magnetic fields should be avoided.
- Basler recommends using I/O cables from the Basler Vision Components range:
  - Power-I/O Cable M8 6p/open, 5 m
  - Power-I/O Cable M8 6p/open, 10 m

Physical Interface

Camera Connectors and Status LED

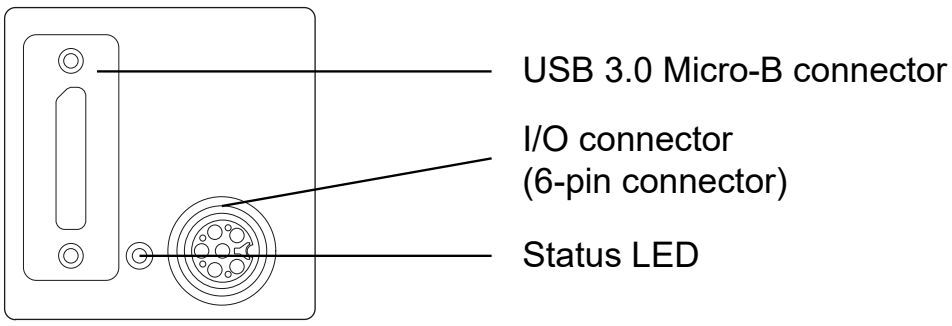

I/O Connector

- M8 6-pin female connector, coding A-standard, according to IEC 61076-2-104
- Recommended mating connector: M8 6-pin male, coding A-standard, according to IEC 61076-2-104

USB 3.0 Micro-B Connector

- Standard USB 3.0 Micro-B connector with screw lock
- Recommended mating connector: Standard USB 3.0 Micro-B connector with screws

Status LED

Indicates camera operation (LED lit = camera operating).

The LED can be turned off permanently by setting the `DeviceIndicatorMode` parameter to `Inactive`.

LED States

LED State	Meaning
Off	No power
Solid green	Powered
Flashing green (3x short – 3x long – 3x short) repeatedly until error is corrected	System error (e.g., internal error)
Flashing green (3x long) repeatedly until error is corrected	User error (e.g., temperature error)

Connector Pin Numbering and Assignments

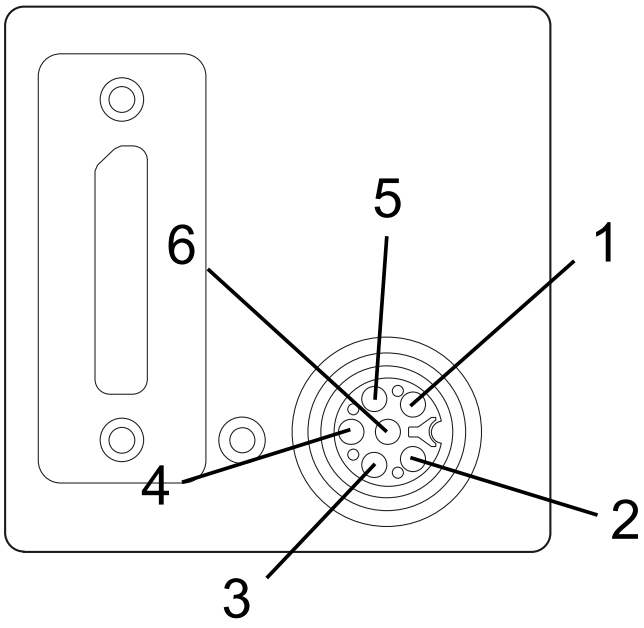

Pin	Line	Function
1	-	Reserved, do not connect
2	Line 1	Opto-coupled I/O input line
3	-	Ground for opto-coupled I/O lines
4	Line 2	General purpose I/O (GPIO) line
5	Line 3	General purpose I/O (GPIO) line
6	-	Ground for General Purpose I/O (GPIO) lines

Precautions

→ See Safety Instructions (ace, ace 2).

Installation

→ See Camera Installation.

Features

→ See Features.