3/2-way solenoid valve, G1/4, monostable - Mod. 334... Mod 344... - Series 3

Product code: 334-E15-02

Datasheet creation date: 19/05/2026 18:11

Check the most updated document online click here



TECHNICAL DATA

Mod.	334-E15-02
Mounting	In-line
Function	3/2NC
Flow rate (Nl/min)	1300
Operating pressure	-0.9 ÷ 10
Pilot pressure	2.5 ÷ 10
Manual override	= bistable, standard
Dimensions of the solenoid	No solenoid
Solenoid voltage	

Products designed for industrial applications. General terms and conditions for sale are available on www.camozzi.com.
This document contains a brief description of the products offered by Camozzi Automation at time of publication.
For more complete and up to date information about the Camozzi Automation product range, please refer to our online catalogue at https://shop.camozzi.com

3/2-way solenoid valve, G1/4, monostable - Mod. 334... Mod 344... - Series 3

Product code: 334-E15-02

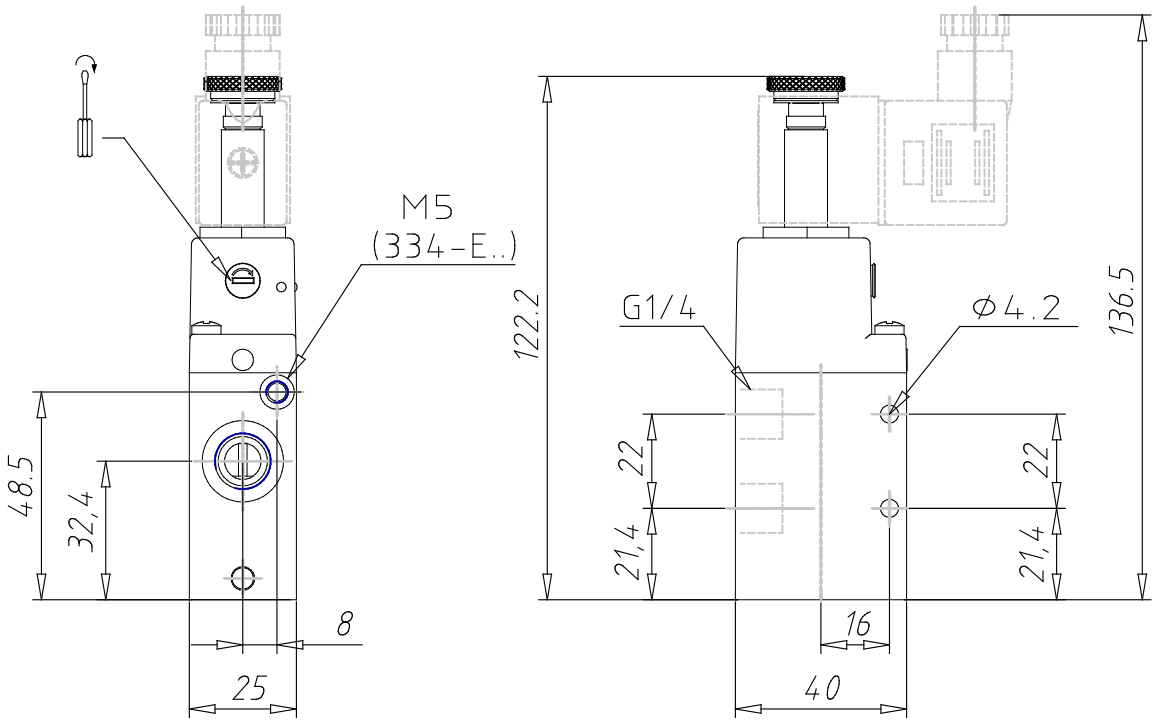

DIMENSIONS

Mod.	334-E15-02
Mounting	In-line
Function	3/2NC
Flow rate (Nl/min)	1300
Operating pressure	-0.9 ÷ 10
Pilot pressure	2.5 ÷ 10
Manual override	= bistable, standard
Dimensions of the solenoid	No solenoid
Solenoid voltage	

Products designed for industrial applications. General terms and conditions for sale are available on www.camozzi.com.
This document contains a brief description of the products offered by Camozzi Automation at time of publication.
For more complete and up to date information about the Camozzi Automation product range, please refer to our online catalogue at https://shop.camozzi.com