E40260

Progressive ring fitting

COMPRESSION FITTING G3/4

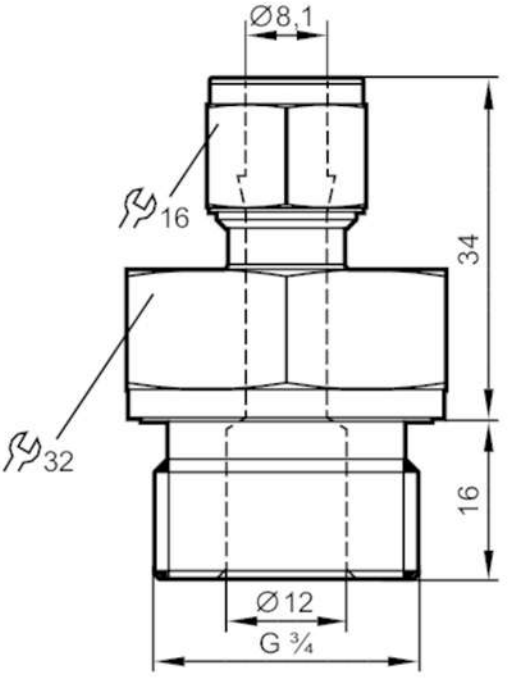

Application		
Installation		Progressive ring fitting
Pressure rating	[bar]	50
Tests / approvals		
Pressure Equipment Directive		A possible classification to PED depends on the application and has to be carried out by the user / operator.
Pressure Equipment Directive EAC		The adapter is intended for use in devices, machines and installations that do not fall under the categories of the technical rule TR CU 032/2013.
Safety instructions		The compatibility between medium and product material has to be checked in all applications.
Mechanical data		
Weight	[g]	159.3
Materials		stainless steel (1.4404 / 316L); Gasket: FKM
Sensor connection		Ø 8 mm
Process connection		threaded connection G 3/4
Accessories		
Items supplied		Gasket
Remarks		
Pack quantity		1 pcs.