PRODUCT DATA SHEET
Vibration Sensor

VS 102

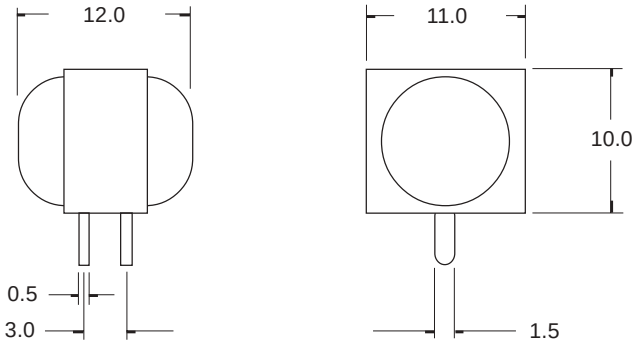

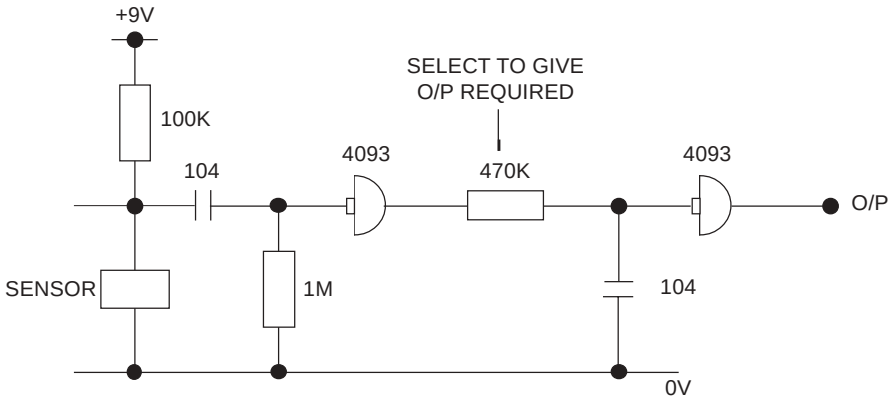

TYPICAL CIRCUIT

Drawings not to scale
All dimensions in mm nominal

SPECIFICATION

CONTACT FORM		Normally Closed
SUPPLY VOLTAGE	Max. Vdc	9
OPERATING TEMPERATURE	Deg. ˚C	80
CONTACTS		Gold Plated
CASE MATERIAL		Plastic
FEATURES		Non-Position Sensitive Non-Mercury Contacts Omni-Directional



Will detect contact closure or contact change sufficient to trigger an I.C.
Suitable for alarm and non-hazardous applications.
All switches have gold plated ball and gold plated terminals for improved life and stability.

Rev. No.	Revision Note	Date
A	Web Site 2002	1-2-02

As part of the company policy of continued product improvement, specifications may change without notice. Our sales office will be pleased to help you with the latest information on this product range and details of our full design and manufacturing service. All products are supplied to our standard conditions of sale otherwise agreed in writing.

©2002
Active Switch & Sensor Limited