Technical datasheet



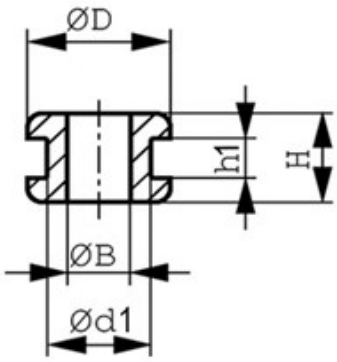

GR 8-5 H5 S0.8

GROMMETS, NBR, BLACK OD: 8mm, ID: 4.6mm

Product Properties:

Watertight	No
Angle model	No
With strain relief	No
Material quality	Other
Cable entry	Round
Colour	Black
Operating temperature	-30-90 °C
Material	Rubber

Dimensions:

ØB1	4.6 mm
H	4.7 mm
h1	0.8 mm
ØD	11 mm
Ød1	8 mm
MOQ	100 .
Unit	pcs

Approvals:

Compliance:

Conflict Minerals	N/A, Contains no conflict minerals
Extended Minerals	N/A, contains no extended minerals
Iron and Steel Sanction	Compliance
PFAS	No PFAS

POPs	No POPs
REACH	No SVHC (Latest. 21 Jan 2025)
RoHS	RoHS 3 (2015/863)
SCIP	Not Applicable
ECCN (EU)	No CLASS
ECCN (US)	EAR99

Other information:

ETIM-Class	EC000879 - Cable entry sleeve
ETIM-Release	9.0
Trademark	NEMIQ
Product Group	Other Grommets
Search Description	SKV2023ERIK
Alternative SKU	GR8-5H5S0.8

Logistic information:

Barcode	733117614699
Country of origin	CN
Item status	Non Stock Item, can be on stock but is not a regular stock item.
MOQ	100 .
Stock code	GR 8-5 H5 S0.8
Taric code	40169300
Unit	pcs

*We reserve the right to make technical changes and disclaim any typographical errors.