


Image may differ from product. See technical specification for details.

# 17386

## Radial shaft seal with metal case and SKF Wave lip, for oil or grease

Radial shaft seals are used between rotating and stationary machine components, or between components in relative motion. CRW1 seals are designed with a metal case, an SKF WAVE lip made of elastomer with higher pumping rate to reduce heat generation, and a garter spring to optimize sealing against the shaft. Most of the seals feature the SKF Bore Tite coating on the outside diameter that helps fill small imperfections in the housing bore.

- For oil or grease
- With garter spring
- WAVE lip creates higher pumping rate
- WAVE lip has less friction between shaft and lip
- WAVE lip has a lower temperature at the contact point

# Overview

## Dimensions

| | |
|---|---|
| Shaft diameter | 44.45 mm |
| Housing bore diameter | 63.551 mm |
| Seal width | 7.95 mm |

## Performance

| | |
|---|---|
| Limiting speed | 3 180 r/min |
| Maximum operating temperature | 100 °C |
| Minimum operating temperature | -40 °C |
| Permissible circumferential speed | 7.36 m/s |
| Rotational speed | 3 180 r/min |

## Properties

| | |
|---|---|
| Design | CRW1 |
| Auxiliary lip | No |
| Sealing lip material | Nitrile rubber (NBR) |
| Type of outside diameter | Metal-cased with sealant coating on the outside diameter |
| Unit system | Inch |

## Logistics

| | |
|---|---|
| Product net weight | 0.0181 kg |
| eClass code | 23-07-08-01 |
| UNSPSC code | 31181602 |

# Technical specification

| | |
|---|---|
| Type of outside diameter | Metal-cased with sealant coating on the outside diameter |
| Lip material | Nitrile rubber (NBR) |
| Seal design | CRW1 |

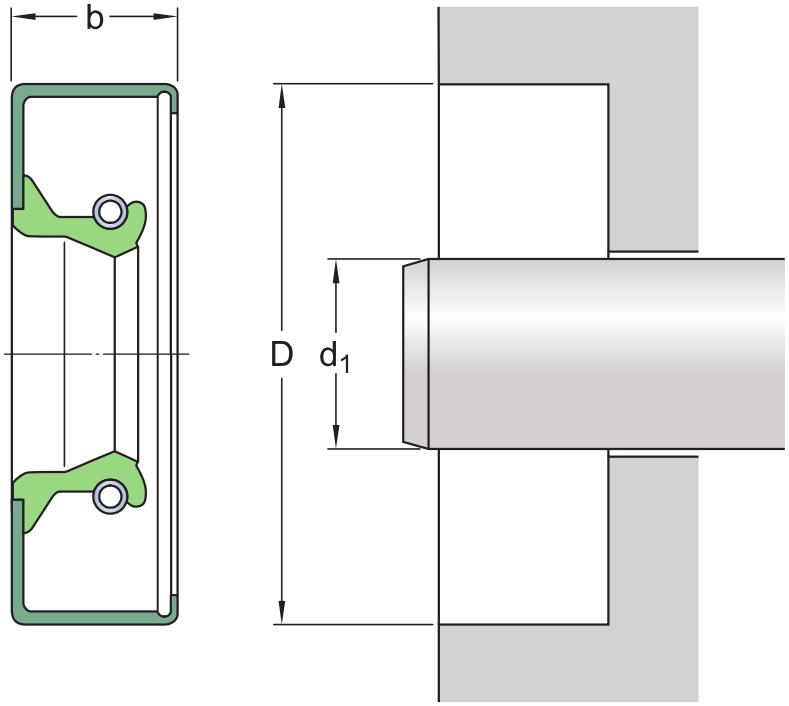


## Dimensions

| | | |
|---|---|---|
| $d_1$ | 44.45 mm | Shaft diameter |
| D | 63.551 mm | Housing bore diameter |
| b | 7.95 mm | Seal width |

## Application and operating conditions

| | |
|---|---|
| Operating temperature | min. -40 °C |
| Operating temperature | max. 100 °C |
| Circumferential speed | max. 7.36 m/s |
| Rotational speed | max. 3 180 r/min |
| Pressure differential | 0.07 N/mm² |

# Terms of use

By accessing and using this website / app owned and published by AB SKF (publ.) (556007-3495 · Gothenburg) (“SKF”), you agree to the following terms and conditions:

**Warranty Disclaimer and Limitation of Liability**
Although every care has been taken to assure the accuracy of the information on this website / app, SKF provides this information "AS IS" and DISCLAIMS ALL WARRANTIES, EXPRESS OR IMPLIED, INCLUDING, BUT NOT LIMITED TO, IMPLIED WARRANTIES OF MERCHANTABILITY AND FITNESS FOR A PARTICULAR PURPOSE. You acknowledge that your use of this website / app is at your sole risk, that you assume full responsibility for all costs associated with use of this website / app, and that SKF shall not be liable for any direct, incidental, consequential, or indirect damages of any kind arising out of your access to, or use of the information or software made available on this website / app.

Any warranties and representations in this website / app for SKF products or services that you purchase or use will be subject to the agreed upon terms and conditions in the contract for such product or service.

Further, for non-SKF websites / apps that are referenced in our website / app or where a hyperlink appears, SKF makes no warranties concerning the accuracy or reliability of the information in these websites / apps and assumes no responsibility for material created or published by third parties contained therein. In addition, SKF does not warrant that this website / app or these other linked websites / apps are free from viruses or other harmful elements.

**Third Party Services**
When viewing YouTube content via the SKF website(s) (i.e. using YouTube API Services), you agree to be bound by the YouTube Terms of Service.

**Copyright**
Copyright in this website / app copyright of the information and software made available on this website / app rest with SKF or its licensors. All rights are reserved. All licensed material will reference the licensor that has granted SKF the right to use the material. The information and software made available on this website / app may not be reproduced, duplicated, copied, transferred, distributed, stored, modified, downloaded or otherwise exploited for any commercial use without the prior written approval of SKF. However, it may be reproduced, stored and downloaded for use by individuals without prior written approval of SKF. Under no circumstances may this information or software be supplied to third parties.

This website /app includes certain images used under license from Shutterstock, Inc.

**Trademarks and Patents**
All trademarks, brand names, and corporate logos displayed on the website / app are the property of SKF or its licensors, and may not be used in any way without prior written approval by SKF. All licensed trademarks published on this website / app reference the licensor that has granted SKF the right to use the trademark. Access to this website / app does not grant to the user any license under any patents owned by or licensed to SKF.

**Changes**
SKF reserves the right to make changes or additions to this website / app at any time.