E21273

Protective bracket

O6 PROTECTIVE BRACKET ROD

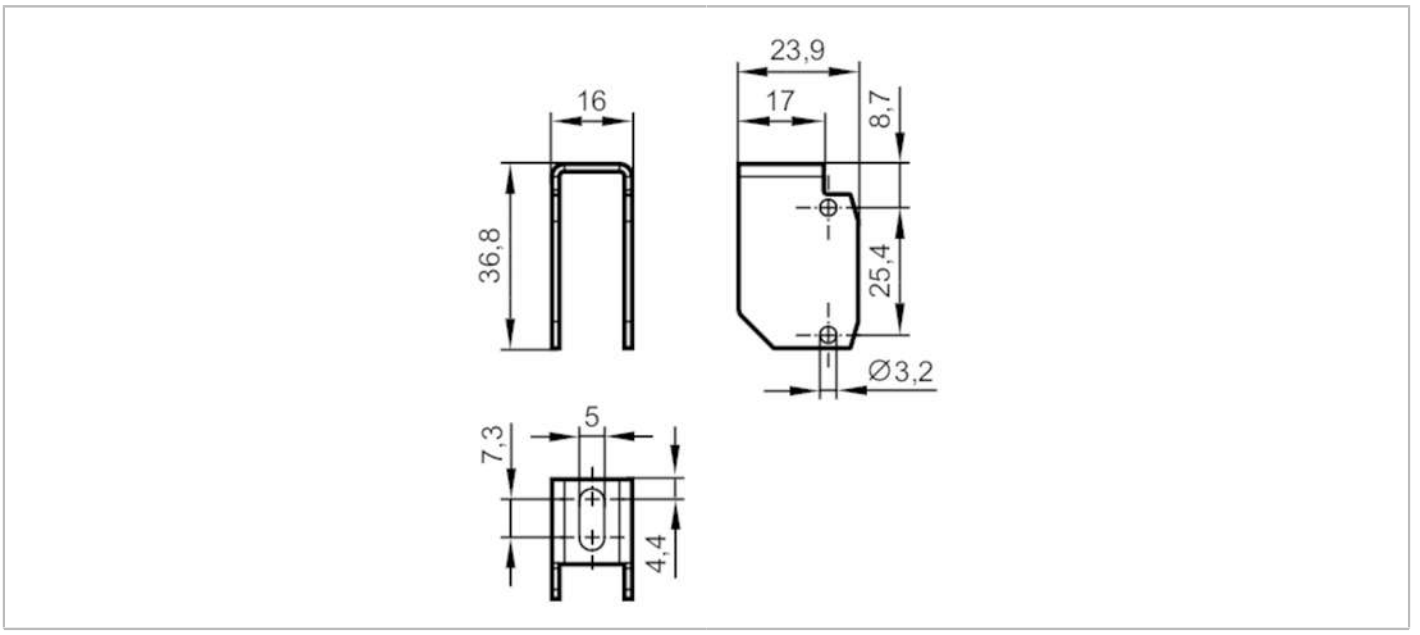

Mechanical data		
Weight	[g]	25.5
Dimensions	[mm]	36.8 x 16 x 23.9
Materials		stainless steel (1.4571/316Ti)
Accessories		
Items supplied		cylinder screws: 2 x M3 x 14
Remarks		
Pack quantity		1 pcs.