TELEDYNE LECROY
Everywhereyoulook™

HVFO
High Voltage Fiber Optically-isolated Probe

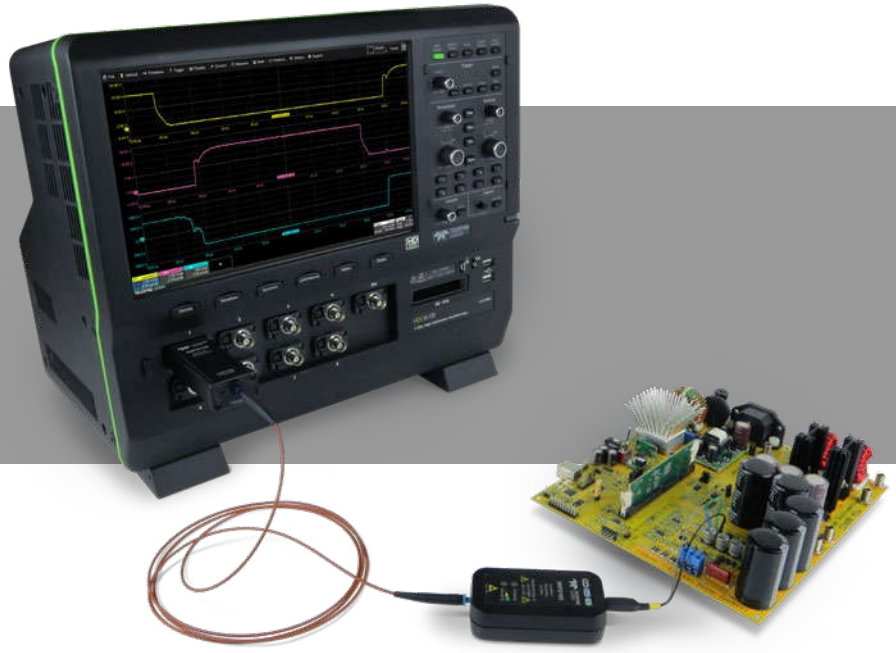

Key Features

Applications

- **Upper-side gate drive signal measurements**
- **Floating control signal or sensor voltage measurements**
- **EMC, EFT, ESD, and RF immunity testing and system optimization**
- **Any small signal measurements with high common-mode voltage**

50 MHz and 60 MHz bandwidth

35 kV common-mode voltage rating (fiber optic isolation)

Superior Noise and Rejection

- **140 dB CMRR**
- **Low loop inductance**
- **Low attenuation**

Reduced DUT loading, better pulse response compared to conventional HV differential probes

Selectable tips from ±1V to ±40V

Eliminates need to "float" the oscilloscope

ProBus-compatible with many Teledyne LeCroy oscilloscopes

The HVFO is an affordable, optimally designed probe for measurement of small signals floating on an HV bus in power electronics designs or for EMC, EFT, ESD, and RF immunity testing sensor monitoring. It far surpasses the measurement capabilities and signal fidelity of both conventional HV differential probes and acquisition systems that rely on galvanic high voltage isolation. Furthermore, it mitigates the need to rely on dangerous test setups that require floating the oscilloscope and probe.

Optical Isolation is Best

Optical isolation between the probe tip and the oscilloscope input reduces adverse loading of the DUT, provides faithful pulse response, and increases confidence in the measurement. Safety against dangerous high voltage levels can be ensured and unsafe "floating" of the oscilloscope can be avoided.

Superior Noise Rejection

High CMRR (140 dB) provides more accurate representation of the measured signal despite the presence of high dV/dt or dA/dt events elsewhere in the circuit. The test lead is optimized to limit loop inductance and radiated pickup. Tip attenuations are optimized for a wide range of signal amplitudes.

Compact, Simple, Affordable

The HVFO is small enough to fit in tight spaces, provides just enough performance for real-world needs, and is affordable enough to fit the tightest of equipment budgets.

Applications

The HVFO is ideal for measuring low voltage (1 to 40V) signals floating on a HV bus, such as in-circuit upper-side gate drive signals and low voltage control, sensor, or sense resistor signals. The probe is also suitable for EMC immunity testing in which a device operation must be monitored in the presence of disturbance signals.

OPTIMIZED FOR SMALL SIGNAL FLOATING MEASUREMENTS

The HVFO provides capability to measure your signal *as it truly is, in-circuit, without compromise*. Upper-side gate drive signals will be faithfully reproduced without loading and distortion or mysterious ringing, overshoots and transients, providing a clear view of the Miller effect on the gate drive signal. AC and DC sensor signals floating at a high voltage or in the presence of EMC, EFT, ESD, and RF disturbance signals can be acquired with high signal fidelity and correctly correlated to in-circuit and control activities.

The HVFO architecture is simple - a single laser and fiber optic cable is used for optical isolation and modulated signal + data communication, and multiple tips achieve different operating voltage ranges.

Amplifier/Modulating Transmitter
A frequency modulating optical transmitter is used for signal and data transmission across a fiber optic cable.

Battery-powered
A long-life Li-Ion battery provides power for ~6 hours of use. Re-charging is via a standard USB micro-B charging interface.

Built-in Safety
The USB micro-B interface also serves as the connection for the attenuating tip to preclude charging during circuit connection.

Selectable Attenuating Tips
Use one of five available tips for voltages from ±1V to ±40V

Flexible Connection to DUTs
Simplified pin socket termination for connection to square pins, solder-in terminals, or grippers..



Fiber Optic Cable
A 1m long cable is provided (a 2m and a 6m long cable is optional). Even longer cables may be supplied by the user.

De-modulating Receiver
The optical signal is received and demodulated to an electrical output to the oscilloscope with correct voltage scaling.

Coaxial Signal Connection
A noise immune coaxial cable (blue) is used to connect to the voltage signal.

Reference and Shield Connection
Separate connections are provided for Shield (black) and Reference (green). The Reference wire carries the signal return current and the Shield carries current associated with the stray parasitic capacitances.

Upper-side Gate Drive Voltage Measurement

An upper-side device has an applied gate voltage floating above ground. Any conventional HV differential probe with high tip capacitance in parallel with C_{GE} or C_{GS}, and/or high impedance and large loop inductance in series with the gate drive impedance will at best load the gate drive signal and at worst cause circuit malfunction. Measurement interference from the low-side device switching can also interfere with proper upper-side gate voltage measurement. The HVFO is optimized for the best upper-side gate drive voltage measurements.

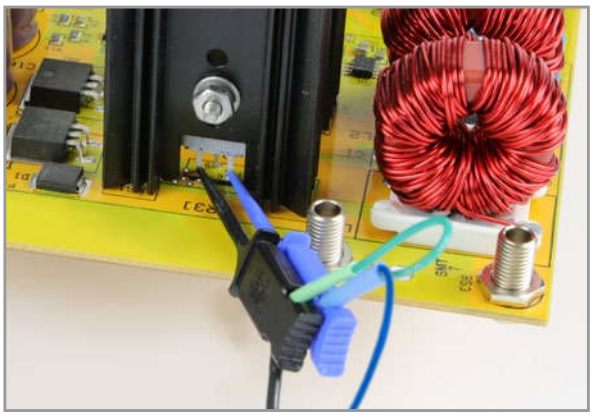

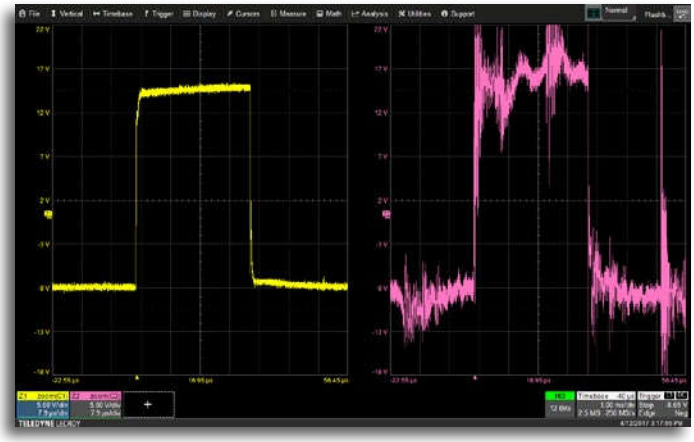

The HVFO (yellow trace) and a conventional HV differential probe (magenta trace) capture an upper-side gate drive signal. The HVFO exhibits a classic, textbook shape while the HV differential probe has more loading and lower-side device high dV/dt signal interference.

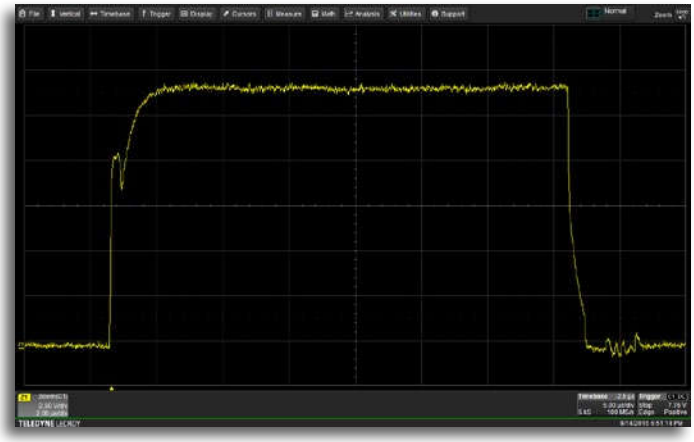

In this upper-side gate drive measurement, the gate drive is captured when current is sinking into the half-bridge phase in a cascaded H-bridge. The Miller effect can be clearly observed.

Floating Control or Sensor Signal Measurements

The HVFO measures only the low voltage sensor voltage across its high impedance input leads. Total load on the device under test (DUT) is very small. Furthermore, the low lead loop inductance, >100dB CMRR, and low attenuation provide superior signal fidelity, noise and rejection.

HV Fiber-optically Isolated Probe

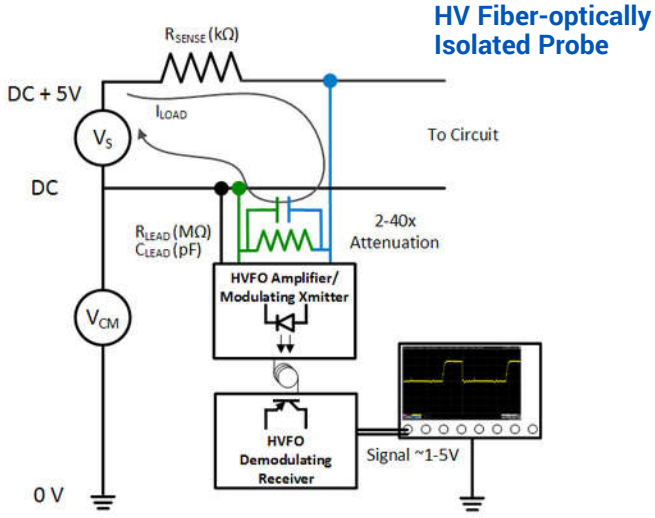

The HVFO measures only the small signal voltage with high probe input impedance; therefore, total DUT load is very small. Low tip loop inductance and 140 dB CMRR provide superior signal fidelity, noise and rejection.

Conventional HV Differential Probe

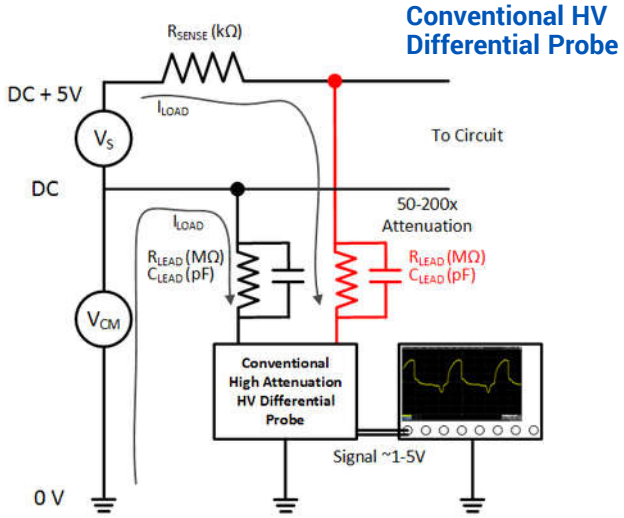

The HV differential probe measures the full common mode + sensor voltage. Therefore, the DUT load is ~100 times larger than with the HVFO. This excessive load will impact the signal fidelity and may even cause the circuit to malfunction.

SPECIFICATIONS & ORDERING INFORMATION

Electrical

Bandwidth	60 MHz (typical, with tip attached)
Rise Time (10-90%)	7.5 ns (typical)
Input Dynamic Range	±1V, ±5V, ±10V, ±20V, ±40V (DC+peak AC) respectively with 1X, 5X, 10X, 20X or 40X attenuating tips. All tips are purchased as accessories (none are included with HVFO103 probe).
Maximum Non-destruct Voltage	5 times the operating voltage rating (tip dependent)
Common Mode Voltage Range	±35 kV (DC+Peak AC) (not for hand-held use, with adequate spacing between probe components and earth ground)
Maximum Input Voltage to Earth	±35 kV (DC+Peak AC) (not for hand-held use, with adequate spacing between probe components and earth ground)
Maximum Safe Input Voltage	For hand-held use, 30 Vrms / 60 Vdc per IEC/EN 61010-031:2015
Offset	Offset capability determined by oscilloscope offset available in a given gain (V/div) setting after accounting for total probe attenuation (total probe attenuation is twice the tip attenuation).
Sensitivity	50 mV/div to 1 V/div (1X tip), 250 mV/div to 5 V/div (5X tip), 500 mV/div to 10 V/div (10X tip), 1 V/div to 20 V/div (20X tip), 2 V/div to 40 V/div (40X tip)
Gain Accuracy	2% (LF, guaranteed)
Input Impedance	1 MΩ || 34 pF (1X tip); 5 MΩ || 26 pF (5X tip); 8 MΩ || 23 pF (10X tip); 10 MΩ || 22 pF (20X tip); 10 MΩ || 22 pF (40X tip)
Input/Output Coupling	DC only
Interface	ProBus
Cable Length	1.25 m (4.1 feet) from input lead to oscilloscope connection (using included 1 meter fiber optic cable)
Battery	6 hour battery life (typical). 1.5 hour re-charge time (typical, with user-supplied dedicated USB charger). 3 hour re-charge time (typical) using supplied USB charging cable connected to oscilloscope USB port

Noise, Rejection, and Electromagnetic Compatibility (EMC)

CMRR (typical)	140 dB (100 Hz), 120 dB (to 1 MHz), 85 dB (to 10 MHz), 60 dB (to 60 MHz)
Noise (Probe only)	7 mVrms (1X tip), 35 mVrms (5X tip), 70 mVrms (10X tip), 140 mVrms (20X tip), 280 mVrms (40X tip)
Electrostatic Discharge (ESD) Immunity	8 kV contact discharge and 10 kV air discharge per IEC61000-4-2, criteria A
Radiated RF Electromagnetic Field Immunity	25 V/m (80 MHz to 2.7 GHz) per IEC61000-4-3, criteria A
Immunity to Conducted Disturbance Induced by RF Fields	10 V/m (150 kHz to 80 MHz) per IEC61000-4-6, criteria A

Environmental

Temperature	0°C to 50°C (operating), -20°C to 70°C (non-operating)
Humidity	5% to 80% RH (non-condensing) up to 30°C, decreasing linearly to 45% RH at 50°C (operating) 5% to 95% RH (non-condensing), 80% RH above 30°C, 45% RH above 50°C (non-operating)
Altitude	Up to 3000 m (operating), 10,000 m (non-operating)
Pollution Degree	2, Indoor Use Only

Certifications

CE Declaration of Conformity	Low Voltage Directive 2014/35/EU (IEC/EN 61010-031:2015) EMC Directive 2014/30/EU (IEC/EN 61326-1:2013) RoHS2 Directive 2011/65/EU

Ordering Information

Product Description	Product Code
High Voltage Fiber Optically-isolated Probe Models and Accessories	
High Voltage Fiber Optic Probe, 60 MHz Bandwidth. Includes soft-carrying case, Qty. 1 Amplifier/Modulating Transmitter, Qty. 1 Demodulating Receiver, Qty. 1 1m Fiber Optic Cable, Qty. 1 USB Charging Cable, Qty. 1 Micro-gripper set.	HVFO103
Attenuating Tips must be ordered separately.	
HVFO10X +/-1V (1x Attenuation) Universal Tip Accessory	HVFO100-1X-TIP-U
HVFO10X +/-5V (5x Attenuation) Universal Tip Accessory	HVFO100-5X-TIP-U
HVFO10X +/-10V (10x Attenuation) Universal Tip Accessory	HVFO100-10X-TIP-U
HVFO10X +/-20V (20x Attenuation) Universal Tip Accessory	HVFO100-20X-TIP-U
HVFO10X +/-40V (40x Attenuation) Universal Tip Accessory	HVFO100-40X-TIP-U
Spare Amplifier/Modulating Transmitter (permits constant operation - charge one while another is being used)	HVFO103-XMITTER
1m Spare Fiber Optic Cable Accessory	HVFO-1M-FIBER
2m Fiber Optic Cable Accessory	HVFO-2M-FIBER
6m Fiber Optic Cable Accessory	HVFO-6M-FIBER
NIST Traceable Calibration Certificate	HVFO103-CCNIST

Customer Service

Teledyne LeCroy oscilloscopes and probes are designed, built, and tested to ensure high reliability. In the unlikely event you experience difficulties, our digital oscilloscopes are fully warranted for three years and our probes are warranted for one year. This warranty includes:

- No charge for return shipping
- Long-term 7-year support
- Upgrade to latest software at no charge

TELEDYNE LECROY
Everywhereyoulook™

1-800-5-LeCroy
teledynelecroy.com

Local sales offices are located throughout the world.
Visit our website to find the most convenient location.

© 2019 Teledyne LeCroy, Inc. All rights reserved. Specifications, prices, availability, and delivery subject to change without notice.
Product or brand names are trademarks or requested trademarks of their respective holders.