G4SR480V5A02CAA

Manufacturer data sheet: V1.0.075

1- or 3-phase voltage-, current-, power- and energy meter with Modbus RTU interface

Status: Available Data sheet created: 17.01.2023

Item Number: 2394800 - **Serie:** Gamma - **EAN:** 9008662016415



- GAMMA industrial design
- Overall width 45mm / 1.77in
- 1- and 3-phase voltage-, current-, power factor-, frequency-, power-, and energy meter up to 277 V a.c. (line to neutral) / 480 V a.c. (line to line)
- Usage with external current transformers only
- One digital input and two digital outputs
- Measured values provided via Modbus RTU / RS485 interface
- Modbus RTU transmission parameters may be set on eCap front
- Firmware update via Modbus RTU interface
- Configurable via Modbus RTU interface

Description

Precise and fast universal energy meter for applications with high accuracy. The eCap measures voltages, currents, power, energy, and frequency along with the power factor and allows fully galvanically isolated transmission via the integrated Modbus RTU / RS485 interface. The required Modbus addresses for the measured values are listed in a separate Modbus register address document available on the website along with the eCap product. A single digital input and two digital outputs can be read and both outputs can be separately written via the Modbus RTU interface. All communication parameters may be set on the front of the device without any additional software. The status LEDs on the front of the eCap give a convenient indication about the device and communication condition.

General information

Short description	1- or 3-phase voltage-, current-, power- and energy meter with Modbus RTU interface
Item Number	2394800
EAN	9008662016415
Main category	Measurement Technology
Series	Gamma
Type	G4SR480V5A02CAA
Design	Industrial design
Supply	12-48V d.c.
Dimensions	45 x 90 x 103 mm
Application notes	Future firmware updates or pre-configurations of the eCap may be performed by integrated Modbus RTU interface. The 'Tele Modbus Configurator' allows to configure the eCap and display the measured values and the version of the eCap. For further information or questions about the product please visit our website. Device must be restarted when setting the parameters!

Safety advice



Danger! Never carry out work on live parts!
Danger of fatal injury!

Do not use the product in case of obvious damage like loose parts, cracks, etc.!
In case of obvious damage, the device must be replaced by qualified personnel!

Always adhere to safety instructions and warnings!



Do not ground current transformers on secondary side!
Operation only permitted with external current transformers!
Consider wiring between current transformers and this device as neutral
Wiring between current transformers and device has same insulation requirements as neutral conductor
Position unit so it can easily and quickly be disconnected from mains power.
Always open or disconnect circuit from power-distribution system of building before installing or servicing current transformers.
The current transformers may not be installed in equipment where they exceed 75 percent of the wiring space of any cross-section area within equipment.
Restrict installation of current transformers in an area where it would block ventilation openings.
Restrict installation of current transformers in an area of breaker arc venting.



ATTENTION: Only qualified and authorized personnel may install, wire, commission, decommission and maintain the Performance Sensor unit and its associated components. Before working on the product, switch off all sources of power which are connected to the device, including the power supply, and secure it against being switched on again.
Protection against impairment: The device must be used as prescribed by the manufacturer.
Failure to observe these instructions may result in personal injury, property damage, or economic loss.



ATTENTION: Never open a current transformer (CT) secondary circuit with primary current applied. Wiring between the CTs and the Performance Sensor must include a shorting terminal block in the CT secondary circuit. The shorting of the secondary with primary current present allows other connections to be removed if needed. An open CT secondary with primary current applied produces a hazardous voltage, which can lead to personal injury, property damage, or economic loss.

IMPORTANT **The Performance Sensor unit is not designed for nor intended for use as a circuit protective device. Do not use this equipment in place of a motor overload relay or circuit protective relay.**

Functions and measurands

Amount of measurands 11

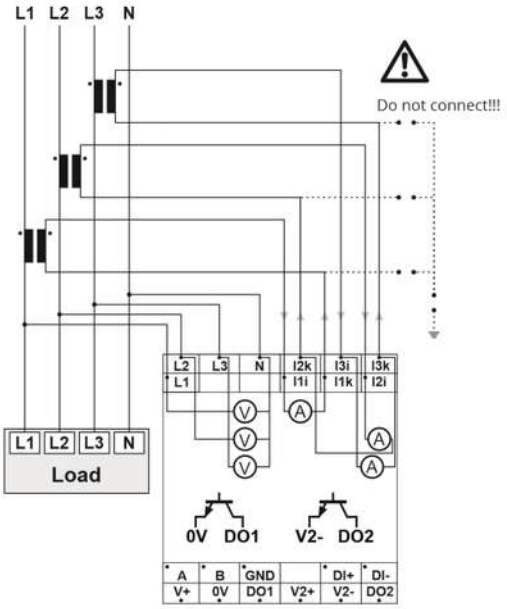

Line to neutral voltage measurement U1rms, U2rms, U3rms (UL-N)

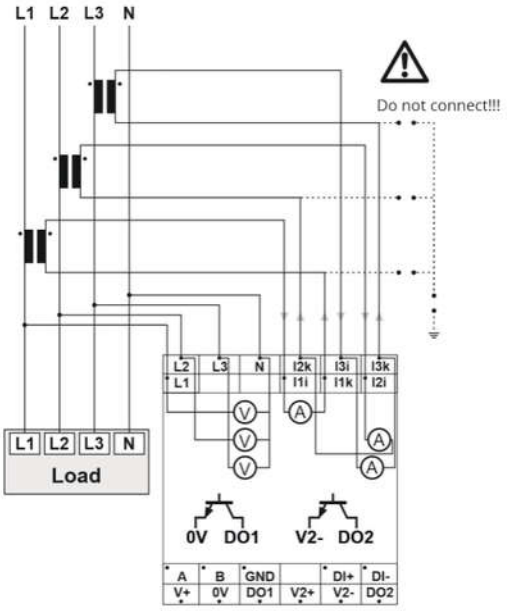

Current measurement I1rms, I2rms, I3rms (cM)

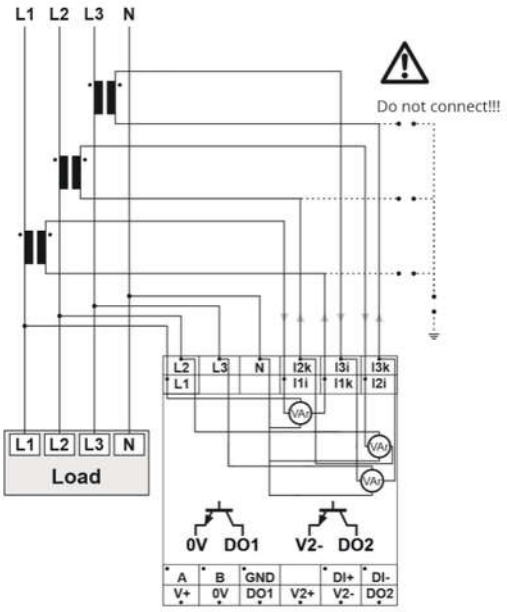

Reactive power measurement Q1, Q2, Q3, Qtotal (rPM)

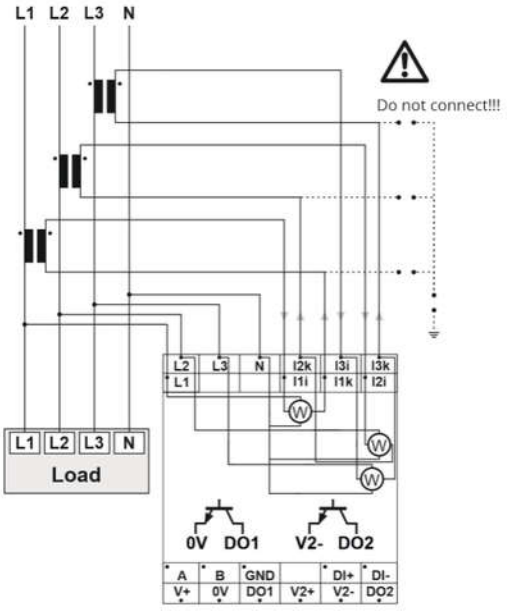

Active power measurement P1, P2, P3, Ptotal (aPM)

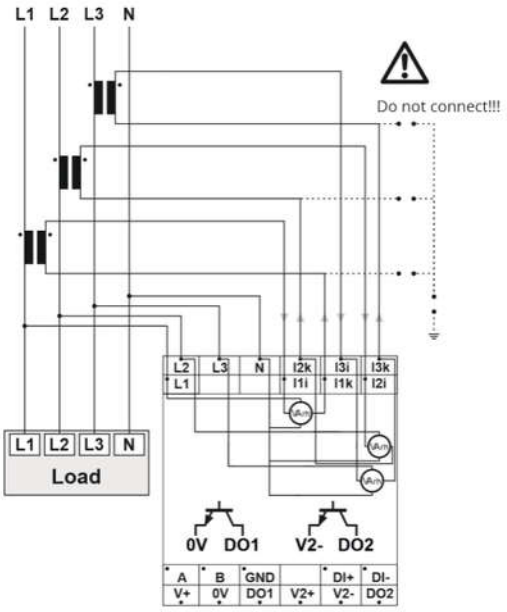

Reactive energy EQ1, EQ2, EQ3, EQtotal (rE)

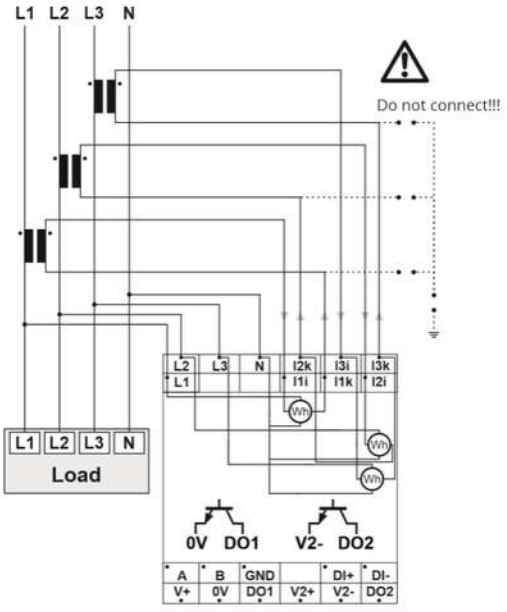

Active energy W1, W2, W3, Wtotal (aE)

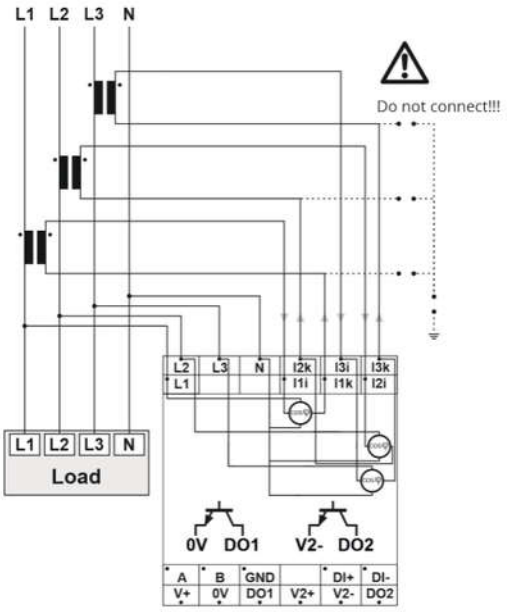

Power factor measurement PF1, PF2, PF3, PFtotal (pFM)

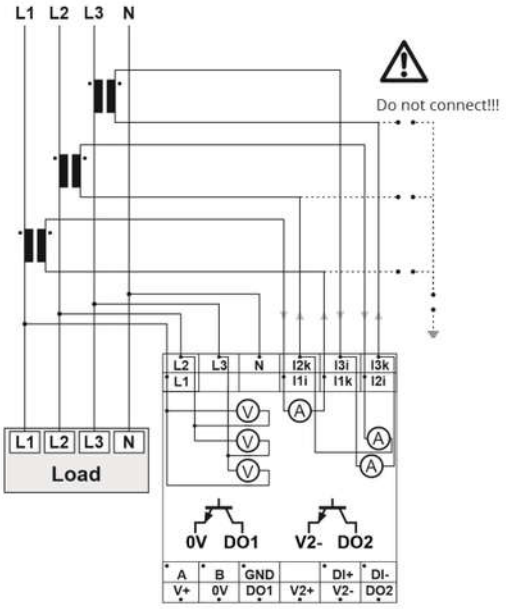

Line to line voltage measurement U12rms, U23rms, U31rms (ULL)

Supply circuit

Terminals/connections	V+, 0V
Supply voltage d.c.	12 ... 48 V d.c.
Supply voltage tolerance d.c.	-5% ...+10%
Rated consumption d.c.	≤ 1 W (typ. 0.4 W) @ No load at RS485 Modbus RTU Interface, no load at Digital Output 1
Duty cycle	100 % (continuous operation possible)
Recovery time	≥ 500 ms (acts as reset)
Drop-out voltage	typ. 9.6 V d.c.
Protection against electric shock	Protective separation by reinforced insulation across supply circuit and sensor inputs.

Indicators

Supply/time lapse 1	Green LED „Uv+“ on: indication of supply voltage
Communication State	Yellow LED "Com" flashes: indication of communication
Error / monitoring function	Red LED „Err“ on: indication of communication and general errors
Output state 1	Yellow LED DO1 on: digital output DO1 is active
Output state 2	Yellow LED DO2 on: digital output DO2 is active

Mechanical design

Housing	Self-extinguishing plastic housing
Housing - protection degree	IP40
Mounting	Mounted on DIN-Rail TH 35x(7.5-15) according to IEC 60715:2017, inside low-voltage switchgear and controlgear assemblies
Terminals/connections	Shockproof terminal connection according to DGUV 3 (screwdriver PZ1 required)
Terminals - protection degree	IP20
Mounting position	any
Max. Tightening Torque	1Nm / 8.85 lb-in
Wiring	Wiring of power supply and other terminals: Minimum 300 V Insulation; Copper, stranded or solid wire
Terminal capacity	1 x 0.5 to 2.5mm² with/without multicore cable end 1 x 4mm² without multicore cable end 2 x 0.5 to 1.5mm² with/without multicore cable end 2 x 2.5mm² flexible without multicore cable end

Digital Input

Terminals	DI+, DI-
Voltage threshold	typ. 8 V d.c.
Maximum input voltage	55 V d.c
Current trheshold	typ. 1 mA
Input resistance	typ. 8 kOhm
Protection against electric shock	Protective separation by reinforced insulation across Digital Input and all other circuits

Measurement circuit - voltage

Category	Category One Sensor Inputs
Voltage waveform	Sine
Terminals	L1, L2, L3, N
Working frequency	46 ... 63 Hz (63 Hz ... 400 Hz pending)
Measuring range 1-phase mains	0 to 277 V a.c.
Measuring range 3-phase mains	3~ 0 to 277 V a.c. (phase-to-neutral voltage) / 480 V a.c. (phase-to-phase voltage)
Voltage overload capacity	319 VrmsLN (phase-to-neutral voltage) / 552 VrmsLL (phase-to-phase voltage)
Input resistance	typ. 450 kOhm; (L1 ... L3 to N)
Overvoltage category	III (according to IEC 61010-1)
Rated impulse withstand voltage	6 kV
Measuring method	True RMS

Measuring circuit - current

Category	Category Two Sensor Inputs
Type	Indirect measurement via external current transformers. Nominal CT output current: 5 A
Terminals	I1i-I1k, I2i-I2k, I3i-I3k
Working frequency	46 ... 63 Hz (63 Hz ... 400 Hz pending)
Measuring range	≤ 5A rms
Overload capacity	8 Arms @ t < 5 s
Crest factor	≤ 2.8 (14 Apk max.)
Input resistance	typ. 10 mOhm;
Overvoltage category	III (acc. to IEC 61010-1)
Rated impulse withstand voltage	6 kV
Measuring method	True RMS

Accuracy - Voltage Inputs

Category	Category One Sensor Inputs
Base accuracy*	≤ 0.15 %
Frequency influence*	≤ 0.005% / Hz
Repetition accuracy*	≤ 0.02%
Temperature influence*	≤ 0.005 % / °C
	* waveform sine / accuracy relative to upper range value 277 V a.c. (phase-to-neutral) @ 50 Hz, +25 °C

Accuracy - Current Inputs

Category	Category Two Sensor Inputs
Base accuracy*	≤ 0.25 %
Frequency influence*	≤ 0.01 % / Hz
Repetition accuracy*	≤ 0.05 %
Temperature influence*	≤ 0.015 % / °C
	* waveform sine / accuracy relative to full scale value 5 A a.c. @ 50 Hz, +25 °C

Accuracy - Active Power P

Base accuracy*	≤ 0.5 %
Frequency influence*	≤ 0.015 % / Hz
Repetition accuracy*	≤ 0.1 %
Temperature influence*	≤ 0.02 % / °C
	* waveform sine / accuracy relative to full scale value @ 50 Hz, +25 °C, phase shift 0 degrees

Accuracy - Reactive Power Q

Base accuracy*	≤ 1.5 %
Frequency influence*	≤ 0.015 % / Hz
Repetition accuracy*	≤ 0.1 %
Temperature influence*	≤ 0.02 % / °C
	* waveform sine / accuracy relative to full scale value @ 50 Hz, +25 °C, phase shift 30 degrees

Accuracy - Apparent power

Base accuracy*	≤ 0.5 %
Frequency influence*	≤ 0.015 % / Hz
Repetition accuracy*	≤ 0.1 %
Temperature influence*	≤ 0.02 % / °C
	* waveform sine / accuracy relative to upper range value @ 50 Hz, +25 °C

Accuracy - Active energy W

Base accuracy*	≤ 2.5 %
Frequency influence*	≤ 0.02 % / Hz
Temperature influence*	≤ 0.025 % / °C
	* waveform sine / accuracy relative to full scale value @ 50 Hz, +25 °C, phase shift 0 degrees

Accuracy - Reactive energy EQ

Base accuracy*	≤ 3 %
Frequency influence*	≤ 0.02 % / Hz
Temperature influence*	≤ 0.025 % / °C
	* waveform sine / accuracy relative to full scale value @ 50 Hz, +25 °C, phase shift 30 degrees

Accuracy - frequency f

Base accuracy*	≤ 5 mHz (typ. 1mHz)
Temperature influence*	≤ 0,15 mHz / °C
Resolution*	≤ 1 mHz
	* 46 ... 63 Hz, +25 °C, waveform sine, measurement with stable input voltages

Output Circuits

Type	Solid state open collector outputs (Power MOSFET), normally open (NO)
Protection of the outputs	Integrated Short Circuit Protection with Auto Restart, Integrated Over-Current Protection

Digital Output 1

Supply	The output-circuit is powered by the Supply circuit of the unit
Terminals	DO1
Protection against electric shock	Protective separation by reinforced insulation across Digital Output 1 and Sensor Inputs
Maximum output voltage	55 V d.c.
Permissible output current	max. 500 mA
Output ON state voltage drop	typ. 0.3 V d.c. @ 500 mA

Digital Output 2

Supply	Own power supply terminals V2+ V2- for output 2 required
Terminals	DO2
Protection against electric shock	Protective separation by reinforced insulation across Digital Output 2 and all other circuits
Operating voltage range	11.4 ... 55 V d.c.
Permissible output current	max. 500 mA
Output ON state voltage drop	typ. 0.3 V d.c. @ 500 mA

Datasheet version

Datasheet version	1.0.3

Interface

Type	Modbus RTU/RS485, 5V Transceiver
Terminals	A, B, GND
Baudrate	9k6 = 9600 baud / 19k2 = 19200 baud / 115k = 115200 baud (Standard: 9600 baud)
Data length	8 Bits
Parity	E - even, O - odd, N - none
Modbus Register	See further documents
Number of stopbits	1 or 2
Protection against electric shock	Protective separation by reinforced insulation across RS485 interface and Sensor Inputs. Separation by functional insulation across RS485 interface and supply circuit

Ambient conditions and general specifications

Ambient temperature IEC	-25 … +55 °C / -13 … 131 F (in accordance with IEC 60068-1)
Ambient temperature UL	-25 … +40 °C / -13 … 104 F (in accordance with UL 508)
Storage temperature	-25 … +70 °C / -13 … 158F
Transport temperature	-25 … +70 °C / -13 … 158F
Relative humidity	15% … 85% (in accordance with IEC 60721-3-3 class 3K3) not condensing
Vibration resistance	10 to 55 Hz 0.35mm / 0.01378 in (in accordance with IEC 60068-2-6)
Shock resistance	150 m/s² 11 ms (in accordance with IEC 60068-2-27)
Pollution degree	2
Installation altitude	Up to 2000 m above sea level
Installation	An external circuit-breaker is required for mains installation to the unit
Location	For indoor use only
Ventilation	No ventilation of surrounding air required
Cleaning	If necessary, the surface of the housing may be cleaned with a dry cloth, only when all sources of power are switch off
Installation note	Power contactors may cause significant disturbances. Therefore, the Performance Sensor should be mounted with a minimum distance of 5 cm to neighbouring power contactors.

Logistics

Minimum Quantity	1
Tariff Number	85364900
EAN	9008662016415
Country of Origin	AT
Product Weight (g)	207

Available declarations / conformities

CE	Open document
REACH	Open document
WEEE	Open document
TSCA	Open document
RoHs	Open document
CMRT	Open document

Media & drawings



2

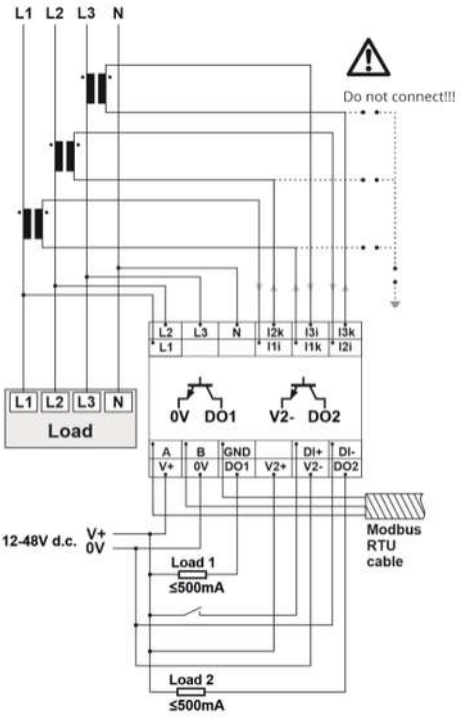

Wiring complete

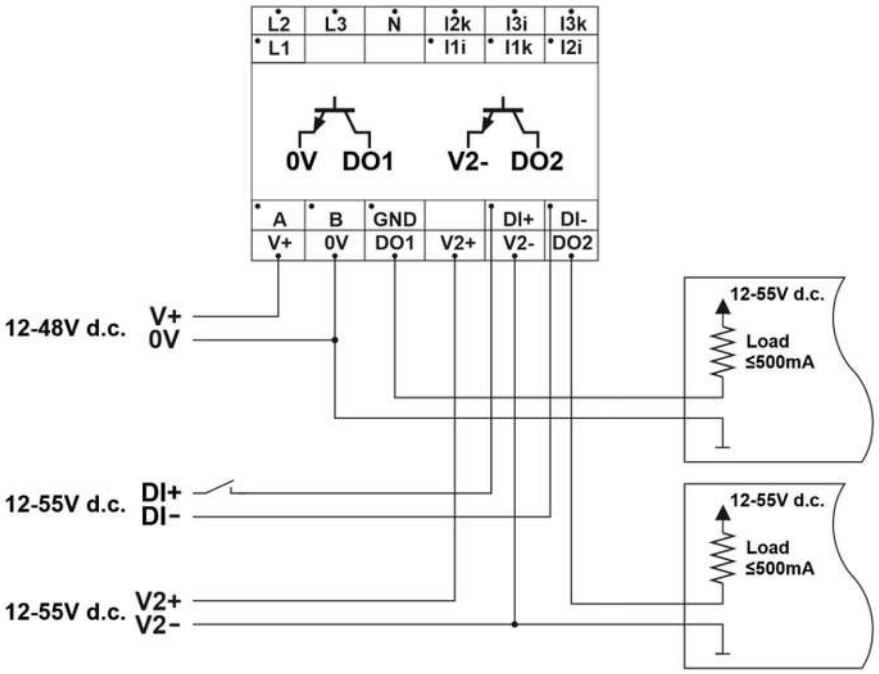

Wiring_PS_DI_DO - variant 1

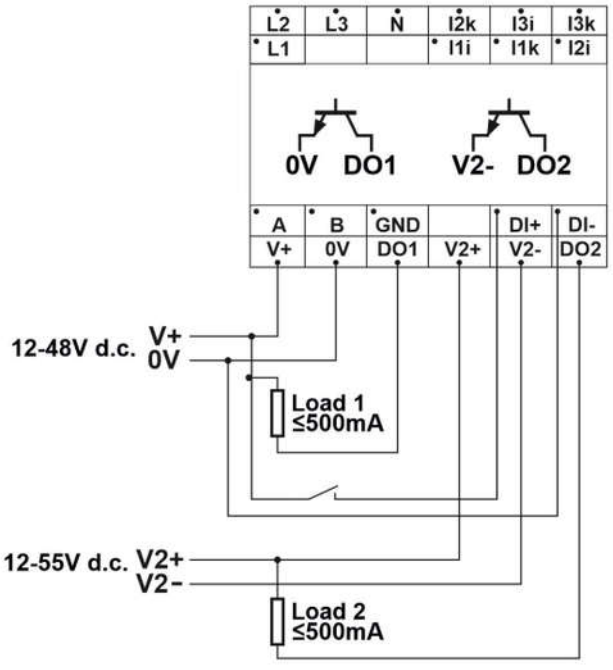

Wiring_PS_DI_DO_2 - variant 2

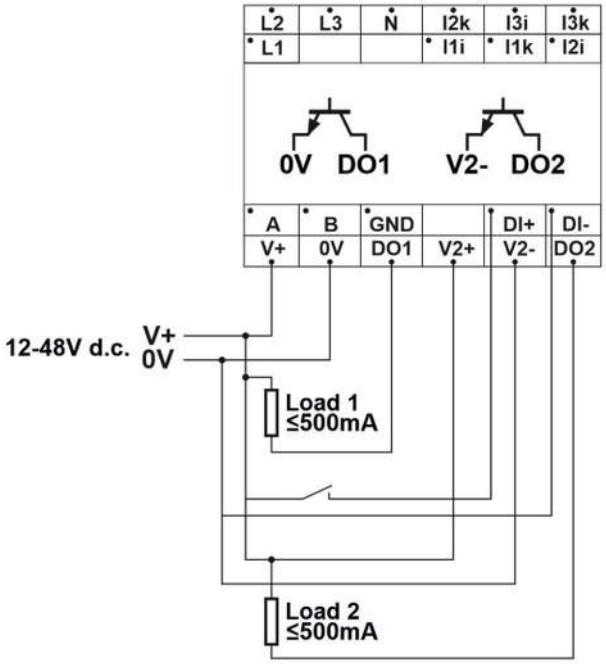

Wiring_PS_DI_DO_3 - variant 3

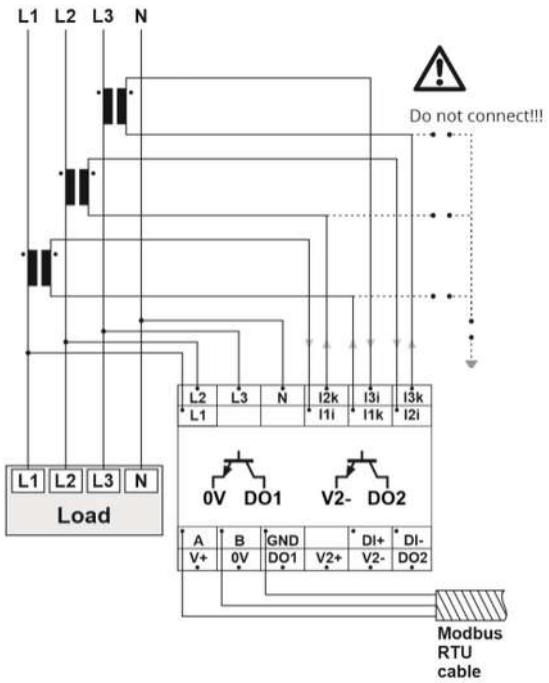

Wiring PS/Modbus

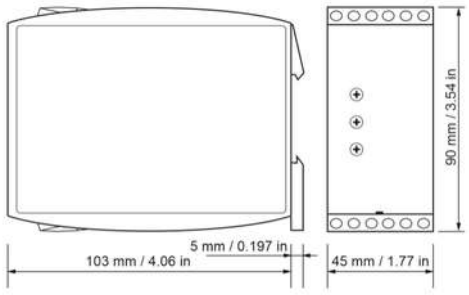

Further documents

Tele Firmware Updater	Download document
eCap Modbus Register Describtion	Download document
eCap Configurator	Download document

Software

Firmware_Updater_1.0.3.zip	Download software
eCapConfigurator_1.0.2.zip	Download software

Tele Haase Steuergeräte Ges.m.b.H
Vorarlberger Allee 38
1230 Vienna
Austria

CALL US +43 / 1 / 614 74 - 0
ONLINE SUPPORT info@tele-online.com

Changes and errors excepted