# DATASHEET - M22-PVLT30/FK11/RG/FIY1



**Housing, Controlled stop pushbuttons/emergency-stop buttons, Mushroom-shaped, 30 mm, Illuminated with LED element, Turn-to-release function, 1 NC, 1 N/O, Cage Clamp, Red, Yellow**

Powering Business Worldwide

**Part no.** M22-PVLT30/FK11/RG/FIY1
**Catalog No.** 199351

## Delivery program

| | | | |
|---|---|---|---|
| Product range | | | RMQ-Titan |
| Basic function | | | Housing<br>Controlled stop pushbuttons/emergency-stop buttons |
| Mounting hole diameter | ∅ | mm | 22.5 |
| Single unit/Complete unit | | | Complete unit |
| Design | | | Mushroom-shaped |
| Diameter | ∅ | mm | 30 |
| Illumination | | | Illuminated with LED element |
| | | | Turn-to-release function |
| Connection type | | | Cage Clamp |
| Description | | | Tamper-proof according to ISO 13850/EN 418<br>Cage Clamp is a registered trademark of Wago Kontakttechnik GmbH/Minden, Germany<br>Turn to release |
| Number of locations | | Qty. | 1 |
| **Colour** | | | |
| Mushroom head | | | Red |
| | | |  |
| Base | | | yellow |
| Enclosure covers | | | Yellow |
| LED | | | red/green |
| Degree of Protection | | | IP65, IP66, IP69 |
| Connection to SmartWire-DT | | | no |
| **Contacts** | | | |
| N/C = Normally closed | | | 1 NC |
| N/O = Normally open | | | 1 N/O |
| Notes | | | = safety function, by positive opening to IEC/EN 60947-5-1 |
| **Actuator travel and actuation force as per DIN EN 60947-5-1, K.5.4.1** | | | |
| | mm | | 5.5 |
| Maximum travel | mm | | 5.8 |
| Contact sequence | | | 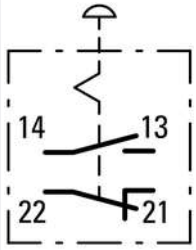 |
| Positive opening (ZW) | | | yes |

# Technical data

## General

| | | | |
|---|---|---|---|
| Standards | | | IEC/EN 60947<br>VDE 0660 |
| certificate | | | CE, EAC UL, CSA, CCC |
| Lifespan, mechanical | Operations | | 60000 |
| Operating frequency | Operations/h | | ≦ 600 |
| Actuating force | | n | ≦ 50 |
| Climatic proofing | | | Damp heat, constant, to IEC 60068-2-78<br>Damp heat, cyclic, to IEC 60068-2-30 |
| Degree of Protection | | | IP65, IP66, IP69 |
| Ambient temperature | | | |
| Open | | °C | -25 - +70 |
| Mounting position | | | As required |
| Mechanical shock resistance | | g | 50<br>Shock duration 11 ms<br>Sinusoidal<br>according to IEC 60068-2-27 |
| Terminal capacities | | $mm^2$ | |
| Solid | | $mm^2$ | 2 x 1 (0.2 - 1.5)<br>2 x 1 (075 - 1.5) Can be plugged without tools |
| Flexible with ferrule | | $mm^2$ | 2 x 1 (0.25 - 1)<br>Use WAGO Variocrimp 4 crimping tool; please enquire for others |
| Solid or stranded | | AWG | 2 x 1 (24 - 16) |
| shipping classification | | | DNV<br>GL<br>LR |

## Contacts

| | | | |
|---|---|---|---|
| Rated conditional short-circuit current | $I_q$ | kA | 1 |
| Overvoltage category/pollution degree | | | III/3 |
| Max. short-circuit protective device | | | |
| Fuseless | | Type | FAZ-B4 |
| Fuse | gG/gL | A | 4 |

# Design verification as per IEC/EN 61439

| | | | |
|---|---|---|---|
| Technical data for design verification | | | |
| Operating ambient temperature min. | | °C | -25 |
| Operating ambient temperature max. | | °C | 70 |

# Technical data ETIM 7.0

Low-voltage industrial components (EG000017) / Control circuit devices combination in enclosure (EC000225)

Electric engineering, automation, process control engineering / Low-voltage switch technology / Command and alarm device / Command and alarm device combination in housing (ecl@ss10.0.1-27-37-12-16 [AKF034014])

| | | | |
|---|---|---|---|
| Number of command positions | | | |
| Number of push buttons | | | |
| Number of indicator lights | | | |
| Number of key switches | | | |
| Number of selector switches | | | |
| Number of mushroom-shaped push-buttons | | | |
| Suitable for emergency stop | | | |
| Rated control supply voltage Us at AC 50HZ | | V | |
| Rated control supply voltage Us at AC 60HZ | | V | |

| | | |
|---|---|---|
| Rated control supply voltage Us at DC | V | |
| Colour housing cover | | |
| Material housing | | |
| Number of contacts as normally open contact | | |
| Number of contacts as normally closed contact | | |
| Number of contacts as change-over contact | | |
| Degree of protection (IP) | | |
| Degree of protection (NEMA) | | |

## Approvals

| | |
|---|---|
| Product Standards | IEC/EN 60947-5; UL 508; CSA-C22.2 No. 14-05; CSA-C22.2 No. 94-91; CE marking |
| UL File No. | E29184 |
| UL Category Control No. | NKCR |
| CSA File No. | 012528 |
| CSA Class No. | 3211-03 |
| North America Certification | UL listed, CSA certified |

## Dimensions

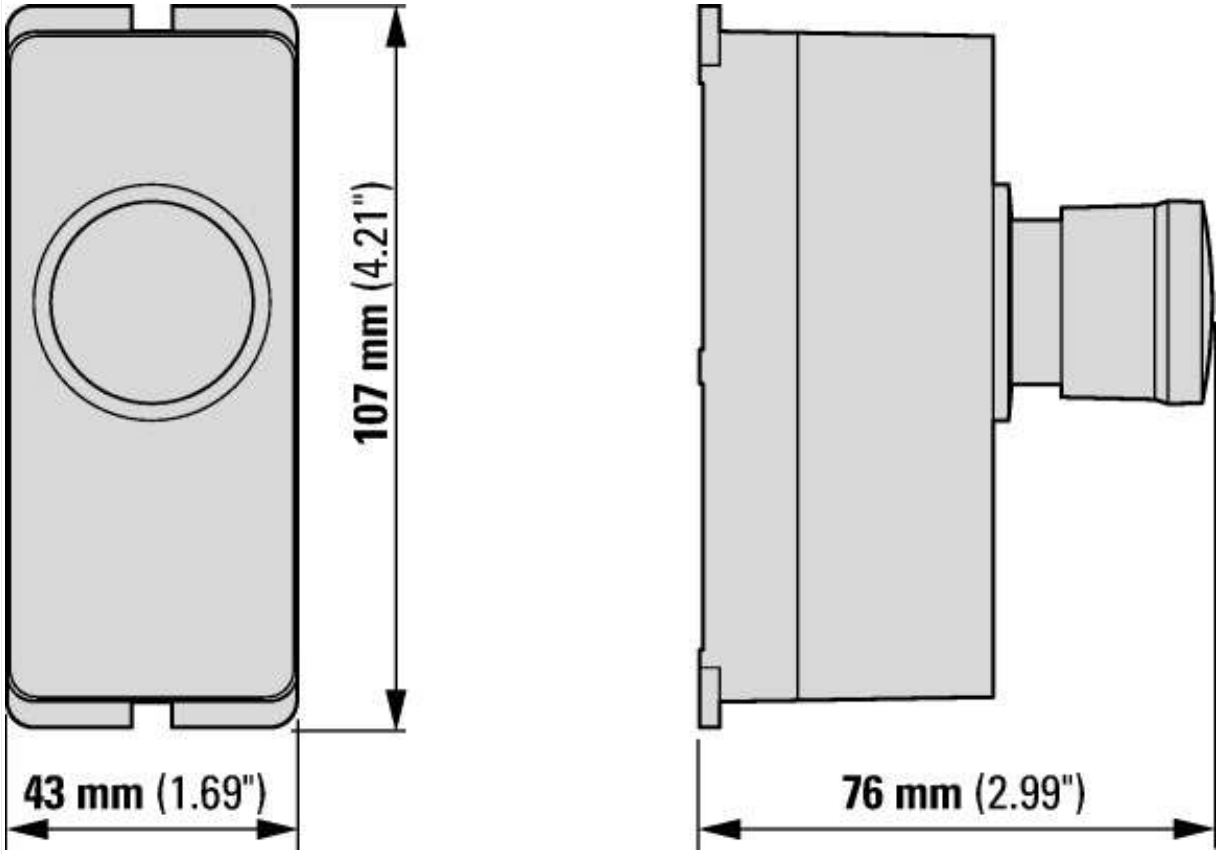



© 10/2021 by Eaton Industries GmbH