RAMO 22 S, M12, round collar, 2 NO, Gold, M12 8-pin A-coded, frontring metallic silver, 2 x 40°, momentary contact function



fields of application

- Measurement-control-regulation
- Electrical engineering
- Mechanical and system engineering
- Signalling systems
- Vehicle construction
- Chemical industry
- Industrial robots

special features

- Precise haptics
- Safe gold contacts
- Simple M12 plug&play connection
- Protected contacts due to sealed housing

description

The RAMO S selector switches offer a solution for every application thanks to a wide variety of contact functions, rotation angles, actuation functions and illuminated panels.

Just like all RAMO actuators, connection is simple using Plug&Play and without any manual wiring - with M12 sensor cables.

Additional information according to UL certificate:
For Class 2 Power Source or Limited Voltage / Limited Current only
Installation only by trained specialist personnel.
Type 4x Indoor only with cable "Cat. No. 7000-08061-0210100 PUR 4x0.25mm² with M8 connector, rated max. 30VAC/DC 4A, manufactured by Murrelektronik GmbH" and "Cat. No. 7000-12221-0340100 PUR 4x0.34mm² with M12 connector, rated max. 30VAC/DC 4A, manufactured by Murrelektronik GmbH"
For Use on a Flat Surface of a Type 1 or 4x indoor only Enclosure.

technical data

general

Potential free	no
Color	black
Bezel color	white
Property of bezel / mushroom	transparent
Collar color	black
Front ring color	metallic silver
Luminous element color	white
Collar shape	round
Operating temperature, min.	-40 °C
Operating temperature, max.	85 °C

direct links

- RAFI eCatalog

The information in this data sheet only contains general descriptions and / or performance features, which may not apply precisely as described to the respective application, and which my change due to further product enhancements. The technical data, illustrations and other information about our products are the mere results of individual technical testing. These descriptions and other product features are only binding if they expressly agreed upon at the time of the conclusion of a binding contract. In all other cases, we reserve the right to make technical changes as well as changes of availability. Pictures and other graphic illustrations are approximations only. All product names may be trademarks or brand names of the RAFI Group or any other sub-supplier of RAFI. The use of such by any third parties for their own purposes may infringe the rights of the respective entity holding those rights.

RAFI GmbH & Co. KG

Ravensburger Str. 128-134
88276 Berg / Ravensburg
Germany
www.rafi-group.com,
info.headquarters@rafi-group.com

Storage temperature, min.	-40 °C
Storage temperature, max.	90 °C
illuminated	Yes
Luminous elements	LED
Packaging	Box
Packaging unit	2 pcs.
net weight	16.9 g
Operating life	200,000 cycles
B10	250,000 cycles
Degree of protection, front side, according to DIN EN 60529	IP65
Degree of protection, rear side, according to DIN EN 60529	IP65
UL Enclosure Type Rating front side	type 4X indoor
Environment resistance	IEC 60068-2-14 IEC 60068-2-30 IEC 60068-2-78
Shock resistance according to standard IEC 60068-2-27	30 g at 11 ms amplitude semi-sinusoidal
Salt-spray resistance according to standard	IEC 60068-2-11
Impact resistance IK	02 side 08 frontal
oscillation restistance according to standard IEC 60068-2-6	5 g at 10...500 Hz
MOQ order	2 pcs.
Pollution degree acc. to DIN EN 61010-1	Pollution degree 2
RoHS compliant	Yes
REACH compliant	Yes

› mounting diameters

Outside dimension, length	29.8 mm
Outside dimension, width	29.8 mm
Outside dimension, height	53.9 mm
Mounting hole	22.3 mm
Mounting depth	30.1 mm
Installation height	23.8 mm
Grid, min.	30 mm

› mechanical data

Actuation function	momentary contact function
Resistance to force on the side	300 N
Contact function	2 NO
Contact material	Gold
Rotating angle	2 x 40°
Fixing	Threaded ring
Threaded ring torque, max.	1.2 Nm
Terminal on the rear	M12 8-pin A-coded

The information in this data sheet only contains general descriptions and / or performance features, which may not apply precisely as described to the respective application, and which my change due to further product enhancements. The technical data, illustrations and other information about our products are the mere results of individual technical testing. These descriptions and other product features are only binding if they expressly agreed upon at the time of the conclusion of a binding contract. In all other cases, we reserve the right to make technical changes as well as changes of availability. Pictures and other graphic illustrations are approximations only. All product names may be trademarks or brand names of the RAFI Group or any other sub-supplier of RAFI. The use of such by any third parties for their own purposes may infringe the rights of the respective entity holding those rights.

RAFI GmbH & Co. KG

Ravensburger Str. 128-134
88276 Berg / Ravensburg
Germany
www.rafi-group.com,
info.headquarters@rafi-group.com

PIN 1	Normally open contact 1 Normally open contact 2
PIN 2	Normally open contact 2
PIN 3	GND
PIN 4	Normally open contact 1
PIN 5	LED +

electrical data

Rated insulation voltage	250 V
Rated surge voltage	2,500 V
Rated operating voltage	35 V (AC-15) 35 V (DC-13)
Operating voltage of the luminous element, min.	22 V
Operating voltage of the luminous element, max.	26 V
Rated voltage, min.	1 V
Rated voltage, max.	32 V
Operating current of the luminous element, max.	25 mA
Rated current, max.	0.1 A
Power loss	0.70080 W
Overvoltage category	2
Kind of short circuit protective device	fuse 250 V / 0,1 A / 1,5 kA gG quick
Conditional short circuit current	1,000 A

The information in this data sheet only contains general descriptions and / or performance features, which may not apply precisely as described to the respective application, and which my change due to further product enhancements. The technical data, illustrations and other information about our products are the mere results of individual technical testing. These descriptions and other product features are only binding if they expressly agreed upon at the time of the conclusion of a binding contract. In all other cases, we reserve the right to make technical changes as well as changes of availability. Pictures and other graphic illustrations are approximations only. All product names may be trademarks or brand names of the RAFI Group or any other sub-supplier of RAFI. The use of such by any third parties for their own purposes may infringe the rights of the respective entity holding those rights.

RAFI GmbH & Co. KG

Ravensburger Str. 128-134
88276 Berg / Ravensburg
Germany
www.rafi-group.com,
info.headquarters@rafi-group.com

drawings

Dimensioned drawing

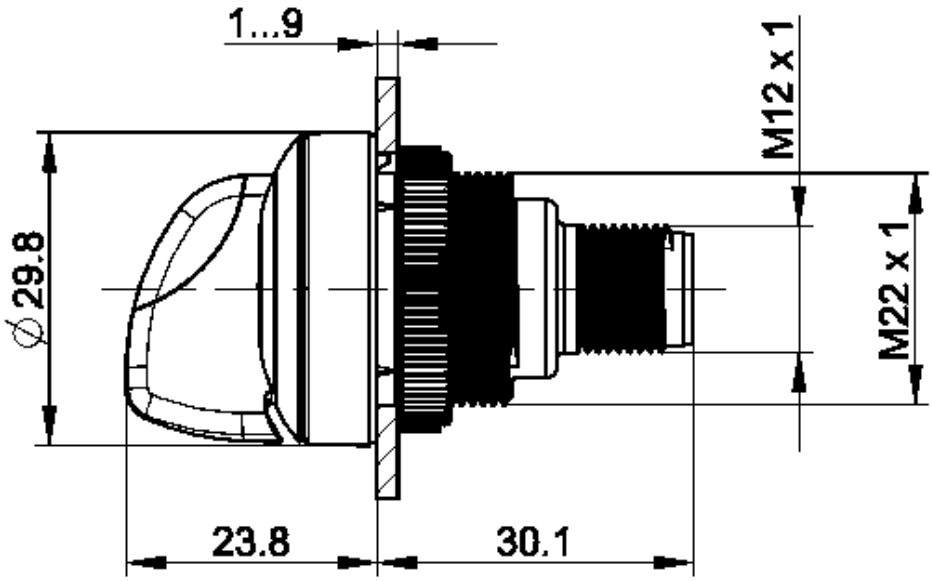

Mounting hole drawing

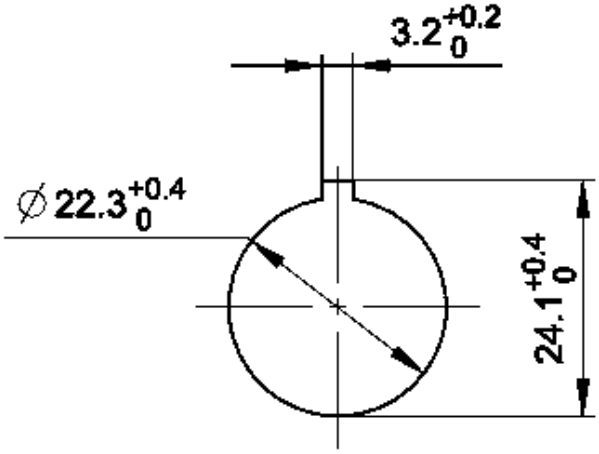

acc. to IEC 60947-5-1

The information in this data sheet only contains general descriptions and / or performance features, which may not apply precisely as described to the respective application, and which my change due to further product enhancements. The technical data, illustrations and other information about our products are the mere results of individual technical testing. These descriptions and other product features are only binding if they expressly agreed upon at the time of the conclusion of a binding contract. In all other cases, we reserve the right to make technical changes as well as changes of availability. Pictures and other graphic illustrations are approximations only. All product names may be trademarks or brand names of the RAFI Group or any other sub-supplier of RAFI. The use of such by any third parties for their own purposes may infringe the rights of the respective entity holding those rights.

RAFI GmbH & Co. KG

Ravensburger Str. 128-134
88276 Berg / Ravensburg
Germany
www.rafi-group.com,
info.headquarters@rafi-group.com

Schematic diagram

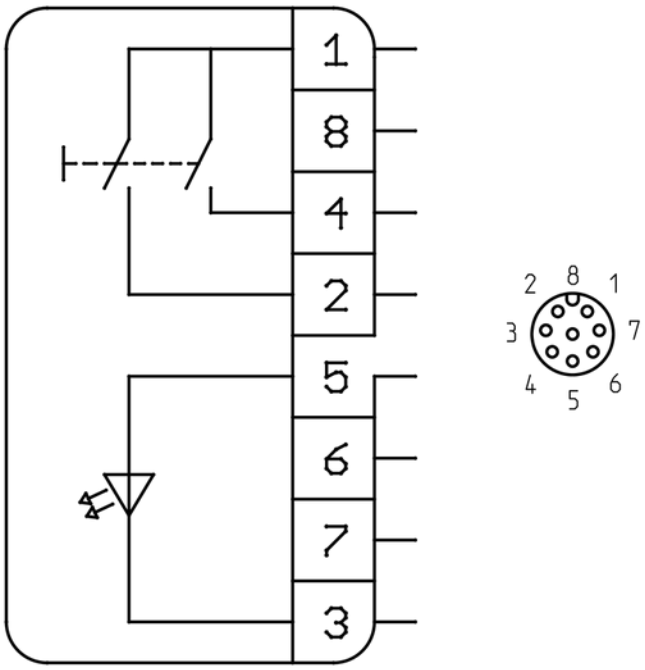

The information in this data sheet only contains general descriptions and / or performance features, which may not apply precisely as described to the respective application, and which my change due to further product enhancements. The technical data, illustrations and other information about our products are the mere results of individual technical testing. These descriptions and other product features are only binding if they expressly agreed upon at the time of the conclusion of a binding contract. In all other cases, we reserve the right to make technical changes as well as changes of availability. Pictures and other graphic illustrations are approximations only. All product names may be trademarks or brand names of the RAFI Group or any other sub-supplier of RAFI. The use of such by any third parties for their own purposes may infringe the rights of the respective entity holding those rights.

RAFI GmbH & Co. KG

Ravensburger Str. 128-134
88276 Berg / Ravensburg
Germany
www.rafi-group.com,
info.headquarters@rafi-group.com