Brand of NTN corporation

Technical data

UCPE209-26

Bearing units



Grey cast housing, radial insert ball bearing with socket set screws,seal with slinger

KIT CONTENT

UC209-26G2, PE209

VISUAL (S)

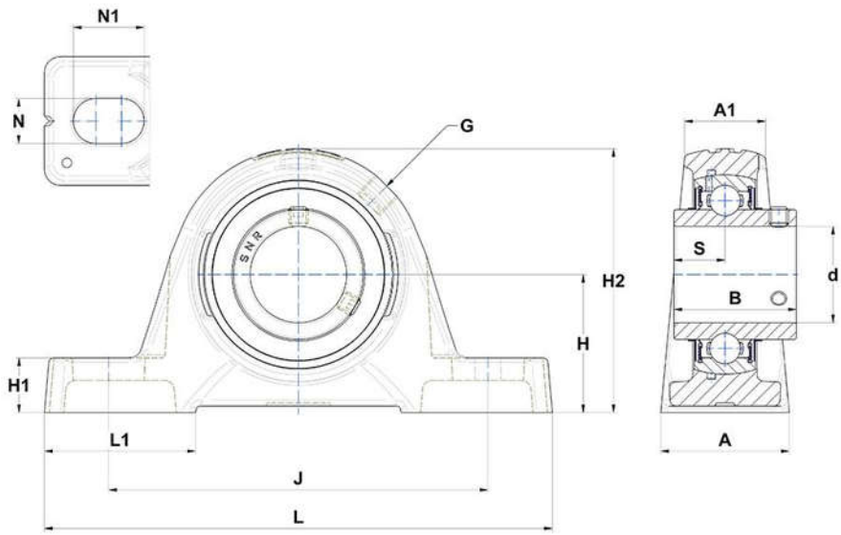

PRODUCT DEFINITION

Brand	SNR
A - Housing width	48 mm
A1 - Housing top width	32 mm
B - Width of Inner Ring	49,2 mm
d - Shaft diameter	41,275 mm
G - Grease fitting	R1/8"

PRODUCT DEFINITION	
H - Distance mounting base to centerline spheric. seating diam.	54 mm
H1 - Housing foot height	21,5 mm
H2 - Housing height	107 mm
J - Mounting holes distance	150 mm
L - Housing length	192 mm
L1 - Housing foot length	54,5 mm
N - Mounting hole dimension	14 mm
N1 - Mounting hole length	29 mm
S - Distance front side/bearing centre	19 mm

PRODUCT PERFORMANCE	
C - Dynamic load rating	31850000 mN
C0 - Static load rating	20800000 mN
Operating temperature min.	253,15 °K
Operating temperature max.	373,15 °K

OTHER FEATURES	
Mass	2,28 kg
Recommended tightening torque for set screw	8 N-m