Thermal Management System (TMS)

Operating instructions (EN) Iss.7

ebmpapst

engineering a better life

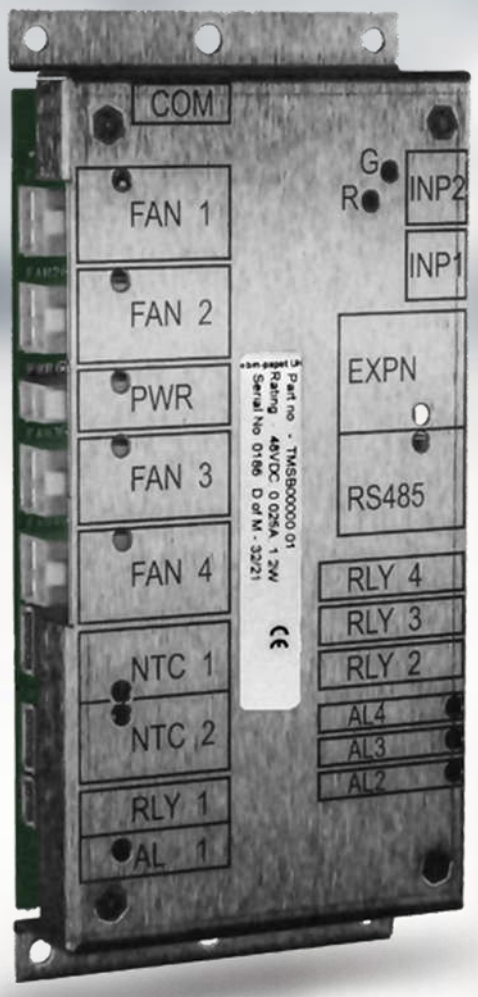

Contents

1 Downloads and Other Documentation 5
2 Introduction 5
2.1 Foreword 5
2.2 Target group 5
2.3 Written styles 5
2.4 Warning notices and notices 5
3 Safety Information 6
3.1 General safety information 6
3.2 Personnel qualifications 7
3.3 Electrical and electromagnetic safety 7
3.4 Intended use 8
3.5 Improper use 8
3.6 Conversions and modifications 8
3.7 Transport and storage 8
4 Technical Data 9
4.1 Summary 9
4.2 Main Features 9
4.3 Description 9
4.3.1 DC Supply 9
4.3.2 Use with -48VDC supply 9
4.3.3 Fan Interface 10
4.4 Fan Control 10
4.4.1 Temperature Profile 10
4.4.2 Multi–Point profile menu option 10
4.5 Configuration 10
4.5.1 Dummy Fan Links 11
4.5.2 Daily Fan Run 11
4.5.3 PWM Frequency 11
4.6 Alarms 11
4.6.1 Alarm Interface 11
4.6.2 Alarm Criterion 11
4.6.3 Alarm Actions 12
4.6.4 Virtual Relay Alarms 12
4.6.5 Fan Fail Criterion 12
4.6.6 Alarm LED Indications 12

4.7 Product drawing 12
4.8 Nominal data 12
4.9 Technical Description 13
4.10 Enclosure and Mounting Data 13
4.10.1 980-CAS11007, Controller PCB Dimensions: 14
4.10.2 DIN Rail Mounting: 14
4.11 Electromagnetic compatibility 14
5 Connection and Start-up 15
5.1 Mechanical connection 15
5.1.1 Mechanical installation instructions 15
5.2 Electrical connection 15
5.2.1 Electrical installation instructions 15
5.2.2 Supply connections and fuses 15
5.3 Connections 16
5.3.1 Preparing the cable for connection 16
5.3.2 Identification of Connectors, LED's and Pin Numbering 16
5.3.3 Connectors, front edge of PCB, pin numbering 16
5.3.4 Connectors, rear edge of PCB, pin numbering 17
5.3.5 Mating Connector Types and Pin Configuration 17
5.3.6 Connectors, rear edge of PCB, pin numbering 18
5.3.7 Connectors, end edge of PCB, pin numbering 18
5.3.8 Cable routing 19
5.4 Factory settings 19
5.5 Connection diagram 19
5.6 Checking connections 20
5.7 Switching on the device 20
5.8 Switching off the device 20
6 Maintenance, malfunctions, possible causes and remedies 20
6.1 Cleaning 21
7 Disposal 21
7.1 Country-specific legal requirements 21
7.2 Disassembly 21
7.3 Component disposal 21
8 Waste Electrical and Electronic Equipment (WEEE) 21
8.1 End of life 21
8.2 Take back policy 22

Disclaimer

Contents of operating instructions

These operating instructions have been created with care. However, ebm-papst assumes no liability for the status, correctness, completeness, or quality of the information provided. Liability claims towards ebm-papst which relate to damage of a material or non-material nature which was caused by use or non-use of the information presented or by the use of incorrect and incomplete information are categorically excluded insofar as there is no evidence of deliberate or grossly negligent culpability on the part of ebm-papst.

Responsibility for documentation

ebm-papst UK Ltd
Chelmsford Business Park,
Chelmsford, Essex
CM2 5EZ, UK

Copyright

ebm-papst UK Ltd
Chelmsford Business Park,
Chelmsford, Essex
CM2 5EZ, UK

ebm-papst has sole copyright. Duplicating this document or using it without the express consent of the author is prohibited.

Availability of operating instructions

The operating instructions must be available to the user at all times, to ensure the device is used safely. They must be kept at an easily accessible location at the place of installation, where they can be viewed at all times, or incorporated in overall product documentation where this product has been integrated.

Application

When using this device, it is essential that the safety regulations and the relevant operating instructions are observed. Read these operating instructions carefully before you start working with the device. Observe the hazard and warning notices to avoid the risk of injury or malfunctioning.

Subject to change.

1 Downloads and Other Documentation

For fan data including essential safety information refer to datasheets for any connected fans.
For information on the TMS Configuration Interface refer to documents:
TMS Text based user interface: 210-OMI13963
TMS GUI Graphical User Interface: 210-OMI13962
For information on the TMS Modbus interface refer to 210-OMI14013
For Installation information refer to TMS Installation Instructions 210-OMI13192
For information on the TMS development kit refer to 210-OMI13191

These documents and GUI software may be downloaded from: http://ebmpapst.co.uk/instructions

Download link below for TMS OMI for general TMS information, 210-OMI12093 (this document):
http://ebmpapst.com/omi-tms-12093-uk

2 Introduction

2.1 Foreword

These operating instructions outline the application possibilities, installation, operation, and programming of the device described on the title page.

When installing and operating the device, all the safety information listed in Chapter 2 must be adhered to. If used in other countries, local laws, guidelines, and regulations apply.

Read these operating instructions carefully before you start working with the device. Observe the following warning notices in order to avoid risk of injury or malfunction of the control electronics.

2.2 Target group

These operating instructions are only intended for skilled persons.

2.3 Written styles

In these operating instructions, the meaning of certain sections is indicated through various means. Descriptive text is shown without a preceding symbol.

- Text preceded by a dot (•) indicates a list introduced by a heading.

Underlined blue text indicates a cross reference, which can be clicked on in the PDF document. Upon doing so, the screen will jump to the relevant section of the document.

2.4 Warning notices and notices

Warning notices and notices are always shown before an instruction where carrying out the action could result in a hazard or material damage.

Important - See separate fan documentation for fan safety requirements.

In this documentation, the following warning notices are used:

Hazard



This notice indicates a hazard with a high level of risk that will directly result in death or severe bodily injury if it is not avoided.

DANGER

→ The arrow(s) highlight corresponding precautionary measures to prevent the hazard.

Hazard



This notice indicates a hazard with a moderate level of risk that may possibly result in death or severe bodily injury if it is not avoided.

WARNING

→ The arrow(s) highlight corresponding precautionary measures to prevent the hazard.

Hazard



This notice indicates a hazard with a low level of risk that may result in light or moderate bodily injury and material damage if it is not avoided.

CAUTION

→ The arrow(s) highlight corresponding precautionary measures to prevent the hazard.

Notices contain information that is particularly important at the relevant point or make the operating steps described easier. They are emphasized as follows:



This notice provides you with recommendations for use and helpful tips.

NOTICE

3 Safety Information

Important - See separate fan documentation for fan safety requirements.

The device has been developed based on engineering principles, as well as recognized guidelines for the safety and protection of users.

Read these operating instructions carefully before starting work on the device. Observe the following warnings to prevent malfunctions or danger to persons

These operating instructions are to be regarded as part of the device. The device is only to be sold or passed on together with the operating instructions. These operating instructions may be duplicated and distributed to inform about potential dangers and their prevention.

3.1 General safety information

Always observe the following safety information, regardless of the specific operating conditions:

- → Before you start working with the device, switch it off and isolate
- → Do not modify or fit any attachments without approval from ebm-papst.
- → Commissioning may only take place following full verification of compliance with all relevant legal requirements, guidelines, and application-related safety regulations.
- → The safety hazards associated with the device must be reassessed following installation in the end application.
- → Keep the workplace clean and tidy.

3.2 Personnel qualifications

The following qualification requirements are specified in these operating instructions:

→ Skilled person: person with relevant education and experience to enable him or her to analyse risks and avoid hazard. (source: EN 50110-1:2013 modified)

→ Instructed person: person adequately advised by a *skilled person* to enable him or her to avoid dangers. (source: EN50110-1:2013 modified)

Required skills and knowledge	
Tasks and activities	**Required skills and knowledge**
Installation	• Practical electrical training • Knowledge of the current electrical safety regulations • Knowledge of the relevant electrical safety regulations at the workplace
Configuration	• Basic knowledge of the structure and set-up of the described connections and interfaces • Basic knowledge of data transfer
Servicing	• Practical technical training • Knowledge of the relevant electrical safety regulations at the workplace

→ Only skilled persons are allowed to install the device, carry out the trial run and perform work on the electrical system.
→ Only instructed persons are allowed to transport, unpack, operate and service the device.

3.3 Electrical and electromagnetic safety

Risk of electric shock

→ The controller must be powered from a SELV (safety extra-low voltage) supply.

DANGER

Connected fans can start automatically at any time

Risk of injury

→ Keep out of the fan's danger zone
→ When working on a connected fan, isolate from the supply and ensure it cannot be switched back on
→ Wait until the fan comes to a stop
→ After working on the fan, remove any tools or other objects from the device.

CAUTION

→ Regularly check the device and connected cables for damage.
→ Only use cables and plug connections approved by ebm-papst.
→ Immediately replace defective cables and loose connections.
→ Ensure EMC capability in the end device/application/installation, e.g., with shielding.
→ Provide suitable measures for avoiding impermissible electromagnetic interference emissions, such as shielding.

3.4 Intended use

This device is intended solely for industrial use in other products and machines. The device is exclusively designed as a built-in device. Any other usage above and beyond this does not conform with the intended purpose and constitutes misuse of the device. The equipment into which this is integrated must be capable of withstanding the mechanical and thermal stresses that can arise from this product. This applies for the entire service life of the equipment in which this device is installed.

- Using the device only in power systems with grounded neutral (TN/TT power systems)
- The device is to be used in networks with network quality characteristics as per EN 50160
- Using the device only in stationary systems
- Performing all maintenance work
- Using the device within the permitted ambient temperature range; see
  - transport and storage
  - nominal data
- Operating the device with all protective devices
- Following the operating instructions

3.5 Improper use

Using the device in the following ways is prohibited and can be hazardous:

- Operation of the device in technical applications for which there are special requirements with regard to safeguarding against failure, for example
  - Operation in aircraft or spacecraft.
  - Operation in railway vehicles, motor vehicles, and ships.
  - Operation in potentially explosive atmospheres (explosion protection area).
  - Operation in medical equipment with a life-sustaining or life-support function.
  - Use as a safety component or to perform safety-related functions.
- Unfastening of connections (e.g., screws) during operation
- Operation with disassembled or manipulated protective devices
- Painting the device
- All other applications not listed as intended uses.

3.6 Conversions and modifications

Only operate the device in its original and faultless condition. Retrofitting, modifying, and converting is strictly prohibited. Any modifications you wish to make must always be agreed with ebm-papst first.

ebm-papst is not liable for any conversions and modifications carried out which have not been expressly approved by us. This also includes any damage resulting from the use of non-original parts or through operating the device outside of the agreed parameters.

3.7 Transport and storage

→ Always transport the device with care and in its original packaging.



CAUTION

- Store the device, partially or fully assembled, in a dry place, protected against the weather and free from vibration, in the original packaging in a clean environment. Even devices explicitly intended for outdoor use
- Protected from environmental influences and dirt until final installation.
- It is recommend storing the device for no longer than one year in order to guarantee trouble-free operation and the longest possible service life.
- If the device is stored for an extended period, it must be connected and started at least every year.

Maximum permitted temperature (°C)	+70

Minimum permitted temperature (°C)	-40

4 Technical Data

4.1 Summary

This Thermal Management System (TMS) controller sets the speed of up to four fans, based on e.g. temperature. It is designed for use with four wire type fans (Power, 0V, Speed control, Tachometer) on 12V, 24V or 48V systems. It can also be used with mains powered EC fans if a separate power supply is provided to the TMS.

- Each fan may be configured for a different speed/temperature profile.
- 0-10V or Open Collector speed-controlled type fans.
- Open Collector Tachometer, Open Collector Alarm or Relay Alarm type fans.
- Configurable Alarm actions (fan speed change, Alarm relays operate)
- Customer configurable or may be supplied programmed to required profile.
- Open Loop or Closed Loop control configurable option, Thermistor or 0-10V inputs.

4.2 Main Features

- Control of four wire fans (Power, 0V, Speed control, Tachometer/Alarm Relay).
- Supply Voltage covers 12VDC, 24VDC and 48VDC nominal (11-57 VDC).
- Open Collector PWM fan speed control, 11-57 VDC supply.
- 0-10V PWM fan speed control, 16-57 VDC supply
- Fan speed based on temperature profile, independent profile for each fan.
- Compatible with tachometer, Alarm Relay, Open Collector alarm type fans
- 1-4 Fans, separate plug connector for each fan.
- Fans powered via controller PCB, up to 11A total fan supply.
- Tachometer/Alarm monitoring of all 4 fans, configurable alarm actions.
- Temperature monitoring, configurable alarm actions.
- Thermistor inputs, 2 off, configurable selection to control each fan.
- Switch Inputs, 2 off, suitable for e.g. door alarms, test switch, fan boost.
- Relay alarm outputs, 4 off, Solid State Relays, contacts rated 60VDC, 100mA.
- All TMS connections use plug-in connectors.
- Side connectivity for low profile.
- Alarm LED's show different alarm states.
- Alarm LED's visible from both top and side, sited close to the edge of the PCB.
- PC Interface for Configuration and Monitoring, electrically isolated.
- Text based and Graphical (GUI) configuration and monitoring interface options.
- Low power consumption, typical 10mA running from 24V/48V supply.
- Enclosure, DIN rail mountable.
- Thermistor inputs may be configured to operate as 0-10V inputs.
- All configuration settings stored in memory, no switches / links / potentiometers.
- Modbus RTU RS485 Interface, for monitoring only

4.3 Description

4.3.1 DC Supply

- Supply Voltage covers 12V, 24V and 48V ranges (11- 57 VDC) SELV
- Supply reversal protection for controller circuitry.
- Earthing – no part of the controller or fan circuit is connected to Chassis/Earth.
- Suitable for use on positive or negative earth (-48VDC) systems.
- Green Power LED will pulse slowly when power connected.

4.3.2 Use with -48VDC supply

The TMS is compatible with -48VDC supplies typically used in telecommunications systems.
Considerations for -48VDC supply use:

1) Connect -48V to Power Connector pin 2, and the more positive supply lead to pin 1.

2) The Thermistors, Fan Speed Control and Fan Tachometer lines are referenced to the negative supply lead. Irreparable damage is likely if these signal wires are allowed to connect to any Earthed metalwork.
3) Consideration should be given to fitting fuses in the negative supply leads.
4) The TMS is equipped with an electrically isolated configuration interface to protect the user's PC while using this interface.

4.3.3 Fan Interface

- Four-wire fans (Supply, 0V, PWM Speed Control, Tachometer/Alarm).
- For Fan Supply via PCB, each fan maximum 130W at 48V, total max .
- Speed control output to fan, 0-10V or Open Collector PWM, configurable frequency
- (0-10V control requires 24 or 48V supply). Inverted control profile option.
- Tachometer Input from fan, Open Collector compatible 1-9 tachometer pulses / revolution or Open Collector Alarm (low for normal, open for Fan Alarm) or Relay Alarm type fan (closed for normal, open for Fan Alarm). Connect the fan Alarm Relay between Tachometer and 0V.
- The red Fan LED next to the Fan Connector will illuminate during Fan alarm

4.4 Fan Control

4.4.1 Temperature Profile

Temperature/Control profile is configurable, an example of a profile can be seen below.

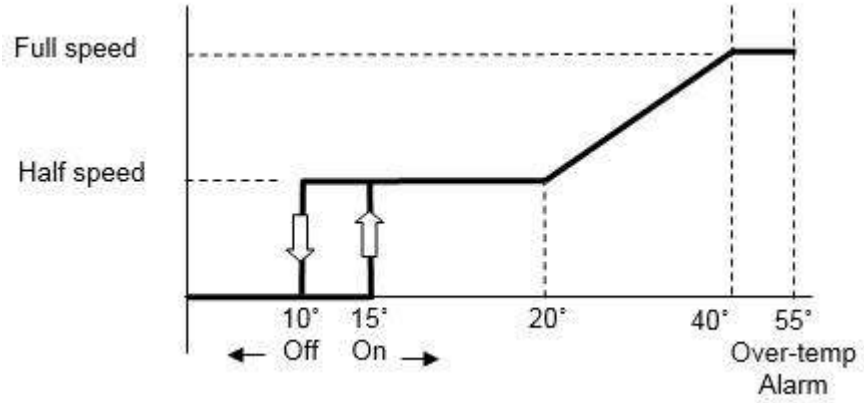

Each fan may have a different profile using either thermistor as configured.
The fans can be set to switch off at low temperature, programmable option, individually programmable on and off points.

4.4.2 Multi–Point profile menu option

Optionally, the Temperature/Control Profile may be changed from the simple linear slope shown above to a multi-point profile. This allows intermediate points to be set on the slope.

4.5 Configuration

The TMS may be configured by connection to a PC using the configuration cable, see below, with either the PC running a Terminal Emulator program or a Graphical User Interface (GUI).

The unit may be configured by loading a previously created Configuration File, or by setting parameters individually. The new configuration may then be saved to a Configuration File.

Configurable settings, each set independently for each fan:

- Low temperature shut-off temperature points (enabled/disabled)
- Start of temperature control band and Top of temperature control band.
- Fan speed at defined temperatures.
- Configured to be controlled by either Thermistor 1 or Thermistor 2 or Both (highest of the two)

- May be set for higher speed at higher temperature (“Cooling profile”) or lower speed at higher temperature (“Heating Profile”)
- Alarm temperature thresholds, configurable.
- Alarm actions can set each Fan Speed independently.
- Tachometer - the number of pulses per revolution may be configured in range 1-9 pulses/rev.
- The Fan Speed Control PWM Output may be set to 0-10V or Open Collector.
- The PMW output slope may be inverted, i.e. selectable between “PWM 0V out = fan off” and “PWM 0V out = fan full speed”.

Global configurable settings, set for all fans together:

- Control mode Open Loop (set PWM Output) or Closed Loop (set Fan RPM)
- Thermistor inputs configurable as 0-10V inputs.
- Enable Virtual Relay Alarms
- Enable Multi-Point temperature profile, see above.
- Fan Speed Control PWM Frequency
- Daily Fan Run
- Dummy Fan links Enabled/Ignored

4.5.1 Dummy Fan Links

If configured to “ALLOWED” a Dummy Fan Link ebm-papst part number 210-HAR12141 may be fitted to suppress alarms from an unfitted fan. The link presence is checked during power-up only.

Normally the link option would simply be configured to “Not Fitted”, but this feature is used by users who prefer to have a single programmed configuration (i.e. single TMS variant) for applications with different quantities of fans, as this reduces their spares holding requirement.
A Fan or Link is then connected as required on a per site basis.

4.5.2 Daily Fan Run

The Fans may be configured to shut off at low temperatures (common in street cabinet applications). In order to have confidence that the fans will restart after what may be an extended off period in adverse conditions, the fans may be configured to briefly run once per day for test, even though remaining below the configured shut-off temperature.

4.5.3 PWM Frequency

The fan speed control PWM frequency may be varied if required for the fans being used, see fan data sheet. Most fans will operate correctly at the default value.

4.6 Alarms

4.6.1 Alarm Interface

Solid State Relays, contact rating 0.1A, 60VDC. Single contact per relay either open or closed, (no Change-Over contacts on board).
Alarm Relay default setting:
Contact closed in normal operation (alarm inactive),
Contact will open for alarm active including power fail (fail safe operation).

Option to invert relay operation so contacts close when alarm active and open for no alarm, except relay contacts always open when unit not powered.

Relays may be configured to change state on Fan Alarm or Temperature Alarm or Switch Input, or 0-10V input voltage if selected instead of Thermistor. In addition, there is a Virtual Relay option, see below.
Red Alarm LED will illuminate when one or more of the configured alarm criteria is active.

4.6.2 Alarm Criterion

Supply power fail – all relay contacts open, all Alarm LED’s off.
An alarm may be raised in the event of any of the following, configurable by program:

1) One or more fan(s) failed – defined as not achieving set speed, within tolerance.
2) Either thermistor indicates temperature (configurable threshold, configurable to alarm Above or Below threshold)
3) Thermistor input open or short circuit
4) Temperature differential between thermistors (configurable threshold)
5) Switch Input High/Low, configurable.
6) 0-10V input voltage level if TMS configured for 0-10V input instead of Thermistor.
The temperature alarm threshold incorporates hysteresis. The Fan Fail alarm incorporates a delay.

4.6.3 Alarm Actions

In the event of an alarm the following actions are configurable by program:
1) Alarm Relay contacts change (for power fail all relay contacts open)
2) Depending upon alarm other fans will react to compensate, configurable by program.
3) Alarm Fan Speed setting overrides temperature-based speed control for the duration of the alarm.
Alarms are non-latching.

4.6.4 Virtual Relay Alarms

In addition to the Four Alarm relays, two “Virtual” Relay Alarms may be enabled. These have no output relays but they can be used to extend the alarm action logic.

4.6.5 Fan Fail Criterion

“Fan Fail” defined as fan not reaching set speed (within tolerance) within a set period. If the PWM output is set below 20% the Fan Fail alarm will be inhibited, to allow for undefined operation around the fan start-up point.
Note:
The Fan Tachometer alarm is configurable to be inhibited on a per-fan basis, this may be used when connected to a fan with no Tachometer or other Open Collector / 0-10V controllable device.

4.6.6 Alarm LED Indications

Alarm LED indication 1-4, illuminated if one or more of the configured alarm conditions are active for the alarm.

4.7 Product drawing

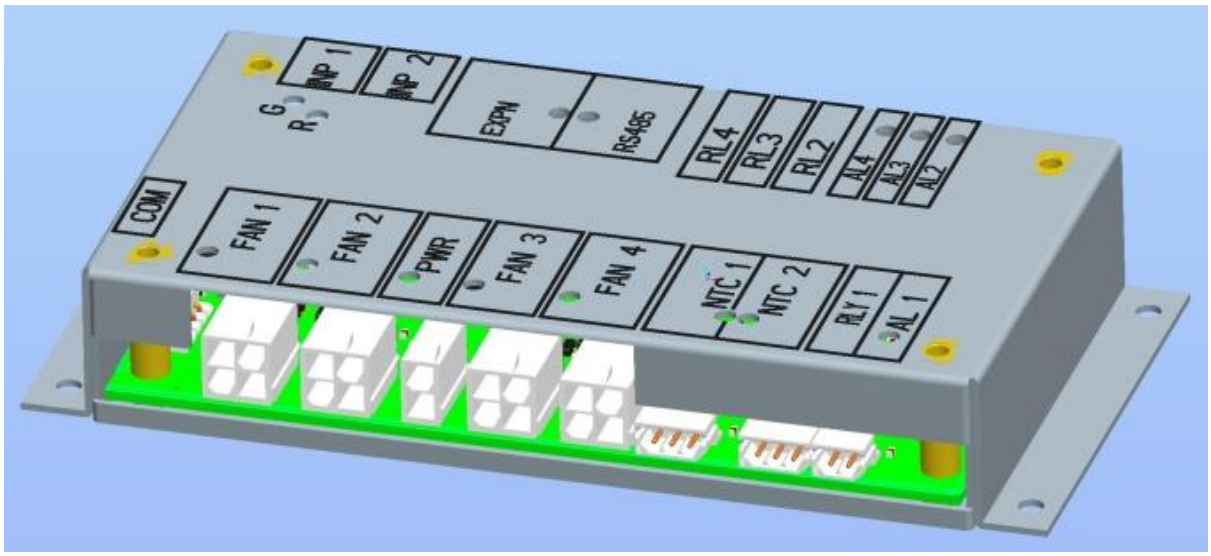

4.8 Nominal data

Part number	TMSB00000-01
Nominal voltage (V DC)	12, 24, 48

Voltage range (V DC)	11-57
Frequency (Hz)	DC operation only
Nominal output	0-100% PWM
Nominal power consumption (W)	0.5W
Nominal current (mA) TMS only	25mA max for controller only, typical 10mA running.
Nominal current (A) including fans, Power Connector with specified cable and connector crimps.	8A maximum using 20AWG wire & Crimp Molex 39-00-0038
	11A maximum using 16AWG wire & Crimp Molex 0457503112
Minimum ambient temperature (°C)	-40
Maximum ambient temperature (°C)	+70

4.9 Technical Description

Weight (kg) PCB plus enclosure	170g
Degree of protection	IP20
Conformity with safety standard	BS EN IEC 62368-1:2020
Supply Fusing	15A Max.

All plastic components used on the controller are Flammability rating UL94V-0 or better.

4.10 Enclosure and Mounting Data

- Cover / guard to prevent accidental contact with controller.
- Connectors accessible and Alarm LED's are visible with cover fitted.
- The following connectors mounted along one edge of PCB:
  Power, four Fans, two Thermistors, one Relay Alarm Output
- Other connectors mounted on opposite edge:
  Three Alarm Relays, RS485, Expansion connector, two switch inputs.
- Configuration connection at end.
- Enclosure Length = 143mm
- Enclosure Width = 65.5mm
- Enclosure Height = 23mm
- Fixing Hole Size 3.5mm diameter (4 off)
- Fixing centres 134x55mm

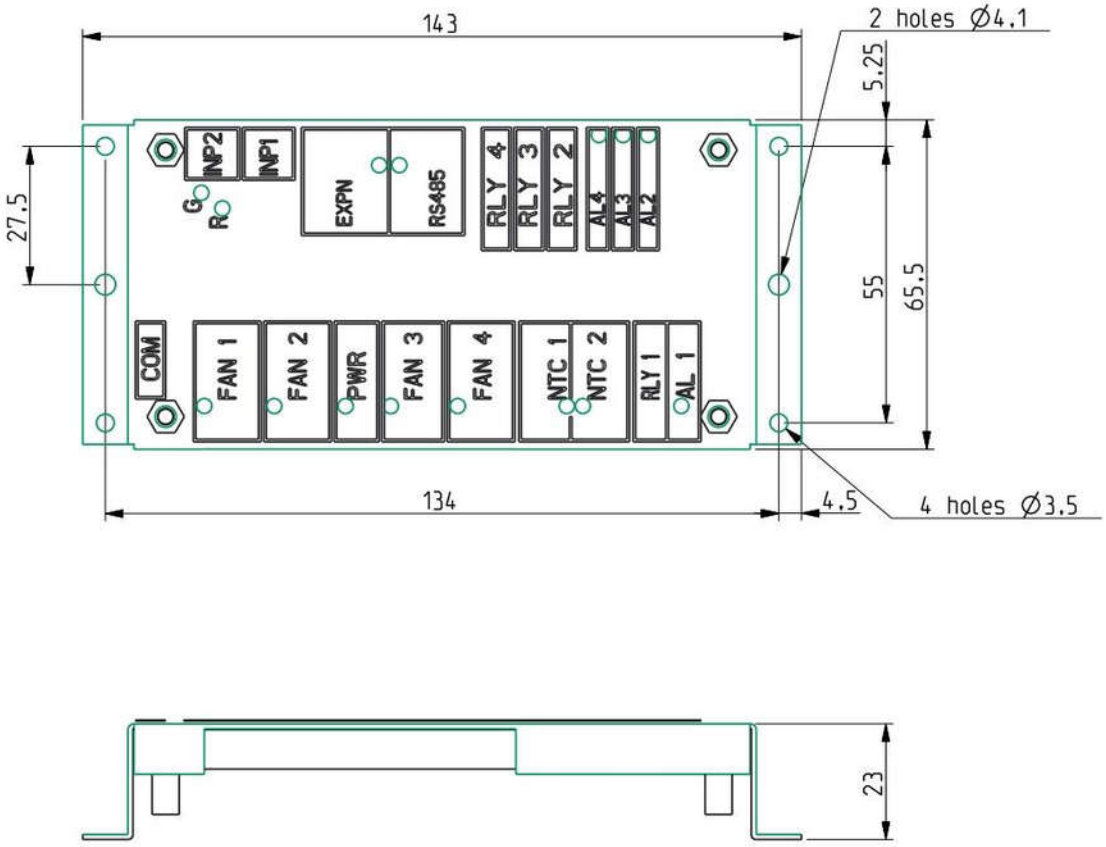

4.10.1 980-CAS11007, Controller PCB Dimensions:

- 119x65.5mm
- Fixing Hole Size 3.5mm diameter (4 off)
- Fixing centres 110x53mm.

4.10.2 DIN Rail Mounting:

The TMS enclosure is fitted with 2 holes 4.1mm diameter on 134mm centres designed to accept DIN mounting clips as shown in the diagram below. The fixing holes are compatible with DIN mounting clip Weidmuller part number 0687900000. Fixings required M4 screws length 8mm, plus spacers (e.g. M4 nuts).



4.11 Electromagnetic compatibility

EMC Compliance

- Radiated Emissions: BS EN55022:2006, Class B
- Radiated Immunity: EN61000-4-3:2002 +A1+A2
- Fast Transient Bursts: EN61000-4-4:2004

- Conducted Immunity: EN61000-4-6:2007

Notes:

- No filtering of fan supply or fan supply inrush limiting provided.
- It is recommended that sensor and control cables over 3m length are screened.
- Route sensor and control wiring separately from AC mains wiring
- Any connection to a DC Distribution Network should be made via an EN61000-4-5 compliant interface

5 Connection and Start-up

5.1 Mechanical connection

5.1.1 Mechanical installation instructions

- Check the device for transport damage
- Install the undamaged device in accordance with your application
- The device must be installed in a clean, dry, vibration free location.

5.2 Electrical connection

DANGER

Electric shock

→ The controller must be powered from a SELV (safety extra-low voltage) supply.

WARNING

Voltage

→ The device is a built-in component and has no disconnecting switch.
→ Only connect the device to circuits that can be switched off with all-pole disconnection switch
→ When working on the device, secure the application/system/machine in which it is installed to prevent it being switch back on

NOTICE

Device malfunction

Route the device's control lines separately from the supply lines, recommended separate >10 cm

Water ingress into wires and cable

Make sure the end of the cable is connected in a dry environment

5.2.1 Electrical installation instructions

- Before connecting the device, make sure the power supply matches the device voltage.
- Only use cables designed for the current level of the controller plus any fans supplied via the controller.
- For determining the cross-section, note the sizing criteria according to EN 61800-5-1. We recommend the use of 105 °C cables. Ensure that the minimum cable cross-section is at least 20AWG/0.5mm² for power cable, AWG 26 / 0.13 mm² for control cable.

5.2.2 Supply connections and fuses.

- There is an on-board Auto-resetting fuse for the controller electronics supply.
- Fan supply not fused, relies on external fusing.
- The controller must be powered from a 15A maximum fused supply.

5.3 Connections

5.3.1 Preparing the cable for connection

Connector crimps should be made using the correct calibrated tool approved by the crimp manufacturer.

NOTICE

Tightness and strain relief are dependent on the cable used.
This must be checked by the user.

5.3.2 Identification of Connectors, LED's and Pin Numbering

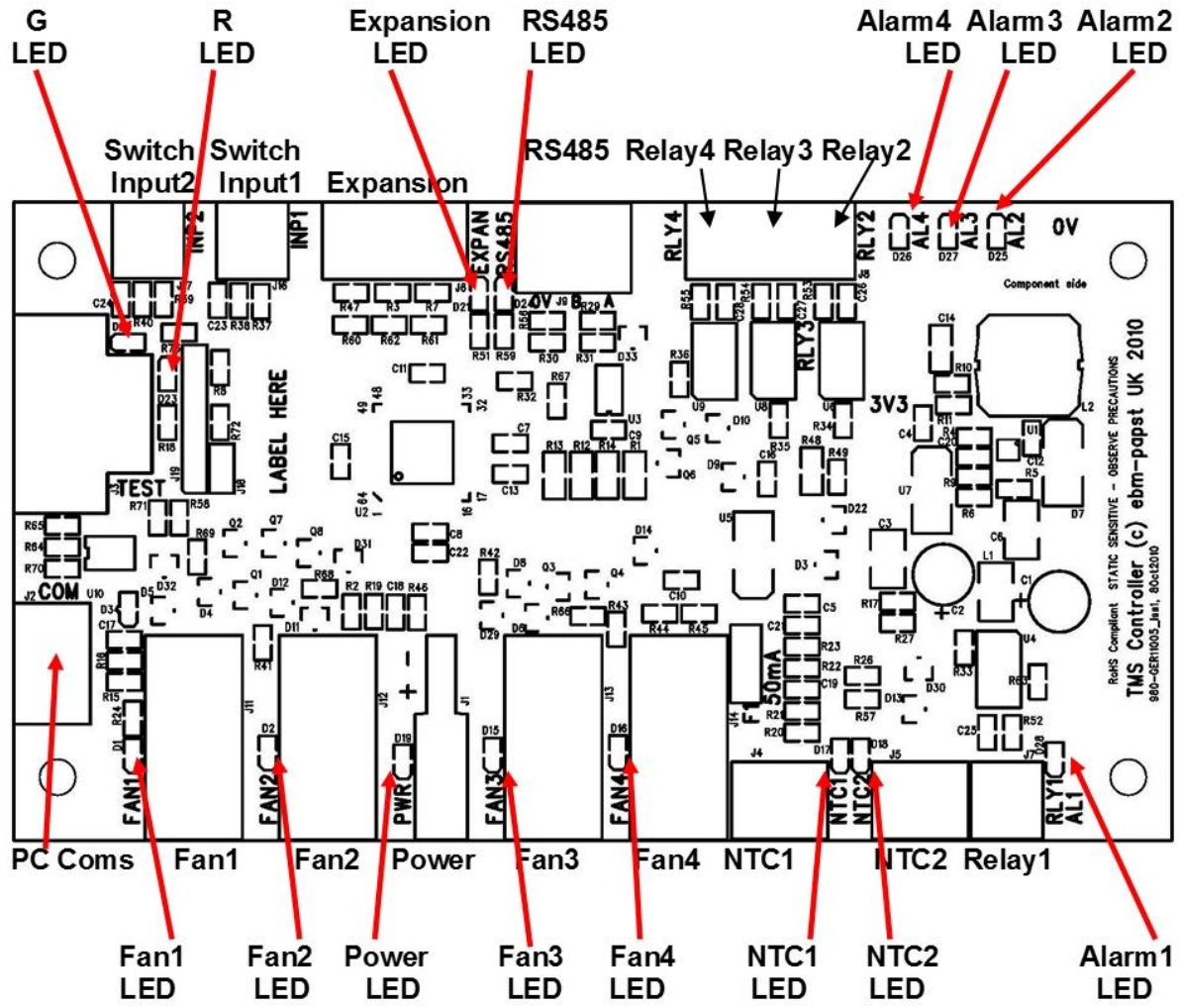

5.3.3 Connectors, front edge of PCB, pin numbering

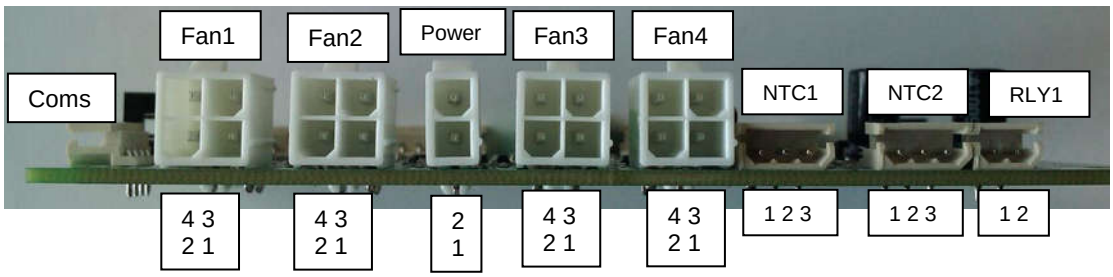

5.3.4 Connectors, rear edge of PCB, pin numbering

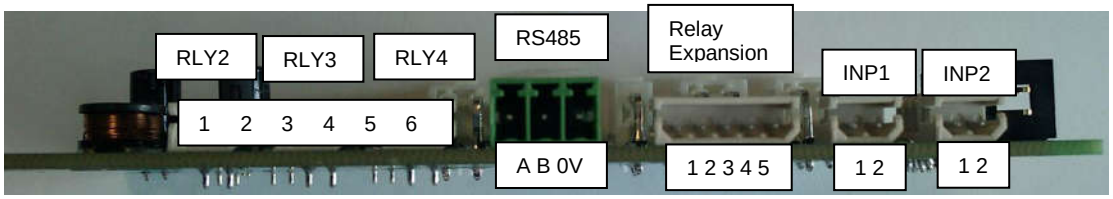

5.3.5 Mating Connector Types and Pin Configuration

FRONT EDGE CONNECTIONS

Power Input

Molex 39-01-2025, 4.20mm (.165") Pitch Mini-Fit Jr Receptacle Housing, Dual Row, UL 94V-0, 2 Circuits

Pin 1 = Positive supply +11 to +57V
Pin 2 = 0V

(For -48V supplies see section “Use with -48VDC supply”)

Fans

Molex 39-01-2045, 4.20mm (.165") Pitch Mini-Fit Jr Receptacle Housing, Dual Row, UL 94V-0, 4 Circuits.

Pin 1 = 0V (connected to Power connector pin 2)
Pin 2 = +11 to +57V Out (connected to Power connector pin 1)
Pin 3 = PWM Output, Fan Speed Control
Pin 4 = Tachometer Input (For Relay Alarm fans connect relay between this pin and 0V)

Crimps for Power and Fan Connectors

Standard Crimp:

Molex 39-00-0039, 4.20mm (.165") Pitch Mini-Fit Crimp Terminal, Female, with Tin (Sn) over Copper (Cu) Plated Brass, 18-24 AWG, Bag. Up to 9A with 18AWG wire.

High Current Crimp:

Molex 0457503112, Mini-Fit Plus HCS Crimp Terminal 45750, 16 AWG, Bag, Copper (Cu) Alloy, Tin (Sn). Up to 11A with 16AWG wire.

Thermistors and 0-10V Inputs

Molex 50-37-5033 - CRIMP HOUSING, 2.5MM, 3WAY

Thermistor connection

Pin 1 = Thermistor terminal 1
Pin 2 = no connection
Pin 3 = Thermistor terminal 2

(Thermistor has no polarity connection requirement)

Alternative connection for 0-10V input use

For “0-10V Input” operating modes only:

Pin 1 = no connection
Pin 2 = 0V (connected to Power connector pin 2)
Pin 3 = 0-10V

Relay Outputs, Relay 1

Molex 50-37-5023 - CRIMP HOUSING, 2.5MM, 2WAY

Pin 1 = Relay 1 terminal 1
Pin 2 = Relay 1 terminal 2

5.3.6 Connectors, rear edge of PCB, pin numbering

Relay Outputs, Relays 2-4

Molex 50-37-5063 - CRIMP HOUSING, 2.5MM, 6WAY

Pin 1 = Relay 2 terminal 1
Pin 2 = Relay 2 terminal 2
Pin 3 = Relay 3 terminal 1
Pin 4 = Relay 3 terminal 2
Pin 5 = Relay 4 terminal 1
Pin 6 = Relay 4 terminal 2

Expansion

Molex 50375053 - CRIMP HOUSING, 2.5MM, 5WAY

Standard ebm-papst EC-Matrix compatible control interface pin-out, plus 12/24/48V Power. For use with customer specific TMS program, contact ebm-papst.

Switch Inputs 1-2

Molex 50-37-5023 - CRIMP HOUSING, 2.5MM, 2WAY

Pin 1 = Switch input (Volt Free or Open Collector Compatible). On-board pull-up resistor.
Pin 2 = 0V (connected to Power connector pin 2)

Crimps for NTC Thermistors, Relay Outputs, Switch Inputs, Expansion and Configuration Interface

Molex 08-70-1040, 2.50mm (.098") Pitch SPOX™ Crimp Terminal 5263, 22-28 AWG, Bag

Modbus RTU RS485 Interface

IMO Precision Controls - 20.1550M/3 - Terminal Block, 3.5MM, 3WAY

Connections:

Pin A = RS485 A
Pin B = RS485 B
Pin 0V = 0V

5.3.7 Connectors, end edge of PCB, pin numbering

Coms - Configuration and Monitoring Interface

Molex 50-37-5043 - CRIMP HOUSING, 2.5MM, 4WAY

Pin 1 = 5V input
Pin 2 = Serial Out, 3V3 Logic level
Pin 3 = Serial In, 3V3 Logic level
Pin 4 = 0V

Connections are electrically isolated from TMS circuit.

Designed for connection of cable assembly ebm-papst part number 210-HAR11887

5.3.8 Cable routing

- Route control cables separately from power wiring

5.4 Factory settings

Factory settings made for the device by ebm-papst.

Table Notes:

Fans: All Fans 1-4 are set to same fan-type and same temperature-fan-speed profile, Fan1 configuration shown only.

Alarm Relays: For Alarm Relays 1-4, all are set not to react to any parameter changes, they will remain in the default state, contacts closed.

RS485 Modbus	
RS485 Modbus Network Address	1
RS485 Modbus Baud	19200
RS485 Modbus Parity	Even
Mode	
Operating Mode	Temperature sets PWM Output
Fan Type	
Fan1 used	Yes
Fan1 Tacho Pluses / Rev	2
Fan1 Control Type	Open Collector PWM, 2kHz
Fan1 Stationary RPM	0
Fan1 Ramp rate	10, rate of fan control speed change.
Fan1 Datasheet Max RPM	3000
TEMPERATURE PROFILE	
Fan1 Off Temperature, °C	5
Fan1 On Temperature, °C	6
Fan1 Proportional Band Start Temperature	25
Fan1 Proportional Band Start PWM %	30
Fan1 Proportional Band Top Temperature	50
Fan1 Proportional Band Top PWM %	90
NTC input for Fan Speed Control	NTC1

5.5 Connection diagram

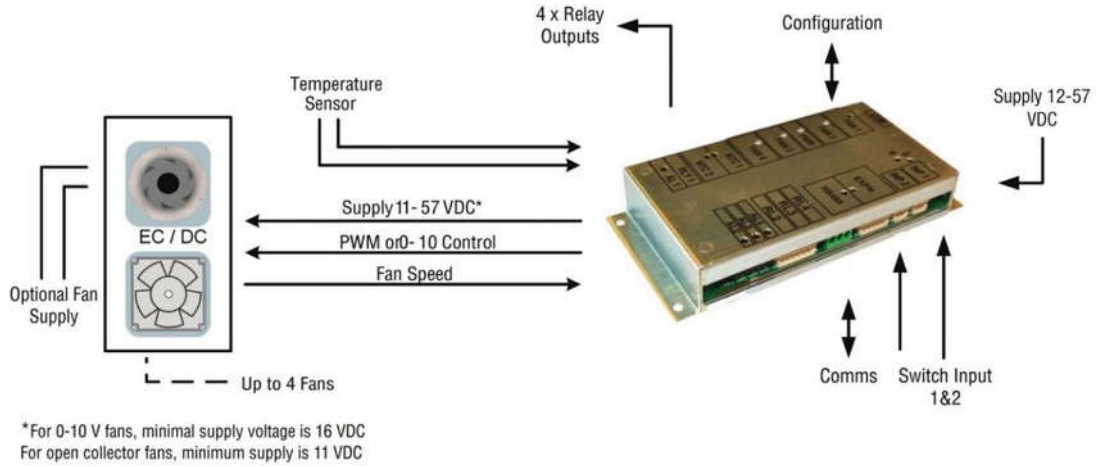

5.6 Checking connections

- Ensure isolation from supply.
- Make sure a fan restart is impossible
- Check the cables for proper fit.
- Crimps must be fitted using the correct calibrated tool.

5.7 Switching on the device

The device may only be switched on if it has been installed properly and in accordance with its intended use, including the required safety mechanisms and professional electrical connection. This also applies for devices which have already been equipped with plugs and terminals or similar

- Before switching on, check the device for visible external damage and make sure the protective devices are functional.
- Check the air flow paths for foreign matter and remove any foreign matter found.
- Apply the nominal supply voltage.
- Start the device by changing the input signal.

5.8 Switching off the device

Switching off the device during operation:

- Switch off the device via the control input.
- Do not switch the device (e.g., in cyclic operation) on and off via power supply.

Switching off the device for maintenance:

- Switch off the device via the control input.
- Do not switch the device (e.g., in cyclic operation) on and off via power supply.
- Disconnect the device from the power supply.

6 Maintenance, malfunctions, possible causes and remedies

Do not perform any repairs on your device. Send the device to ebm-papst for repair or replacement.



WARNING

If control voltage or a stored speed set value is applied, fans will restart automatically, e.g., after a power failure.

→ **Risk of injury**
→ Keep out of the fan's danger zone.
→ When working on the device, switch off the supply voltage and ensure that it cannot be switched back on.
→ Wait until any fans come to a stop.
→ After working on the device, remove any tools or other objects from the device.

Malfunction/fault	Possible cause	Possible remedy
Open Collector controlled fan always runs at full speed	Fan Speed Control wire disconnected	Check fan speed control wiring
0-10V controlled fan always stationary	Fan Speed Control wire disconnected	Check fan speed control wiring
Fan Alarm at high RPM only	Incorrect configuration setting for fan data sheet fan max RPM	Check fan data and configure the setting correctly
Fan Alarm at high RPM only	Incorrect configuration setting for fan data sheet fan tacho pulses / revolution.	Check fan data and configure the setting correctly
Fan alarm at all speeds, Tacho type fan	Fan Tachometer (Hall Effect) wire disconnected	Check fan Tachometer (Hall Effect) wiring

Fan alarm at all speeds, Relay type fan	Incorrect fan relay wiring	Check that one fan alarm relay wire connects to the TMS tacho pin, check the other fan alarm relay wire connects to supply 0V.

6.1 Cleaning

To ensure a long service life, install the unit in a clean area. The unit is not designed to be cleaned.

7 Disposal

For ebm-papst, environmental protection and resource preservation are top priority corporate goals. ebm-papst operates an environmental management system which is certified in accordance with ISO 14001 and rigorously implemented around the world. Right from the development stage, ecological design, technical safety, and health protection are fixed criteria. The following section contains recommendations for ecological disposal of the product and its components.

7.1 Country-specific legal requirements

NOTICE

Country-specific legal requirements
Always observe the applicable country-specific legal regulations with regard to the disposal of products or waste occurring in the various phases of the life cycle. The corresponding disposal standards are also to be heeded.

7.2 Disassembly

Disassembly of the product must be performed or supervised by qualified personnel with the appropriate technical knowledge. The product is to be disassembled into suitable components for disposal employing standard procedures for PCB's.

7.3 Component disposal

The products are mostly made of steel, copper, aluminium and plastic. Metallic materials are generally considered to be fully recyclable. Separate the components for recycling into the following categories:

- Steel e.g. enclosure
- Cables and wires
- Electronic scrap, e.g., circuit boards

Electrical insulating materials on the product, in cables and wires are made of similar materials and are therefore to be treated in the same manner. The materials concerned are as follows:

- Power cables
- Cables for control wiring
- Electrolytic capacitors

Dispose of electronic components employing the proper procedures for electronic scrap.

8 Waste Electrical and Electronic Equipment (WEEE)

ebm-papst UK Ltd complies with the Waste Electrical and Electronic Equipment (WEEE) Regulations through membership of a producer compliance scheme (PCS) as a B2B producer. EEE Producer registration number: WEE/CA0209WR.

8.1 End of life

If the product has come to the end of its life and it is not practical to repair, then the unit can be easily disassembled for the components to be recycled. The product has been designed to meet the requirements of the RoHS directive and most of the materials can be recycled.

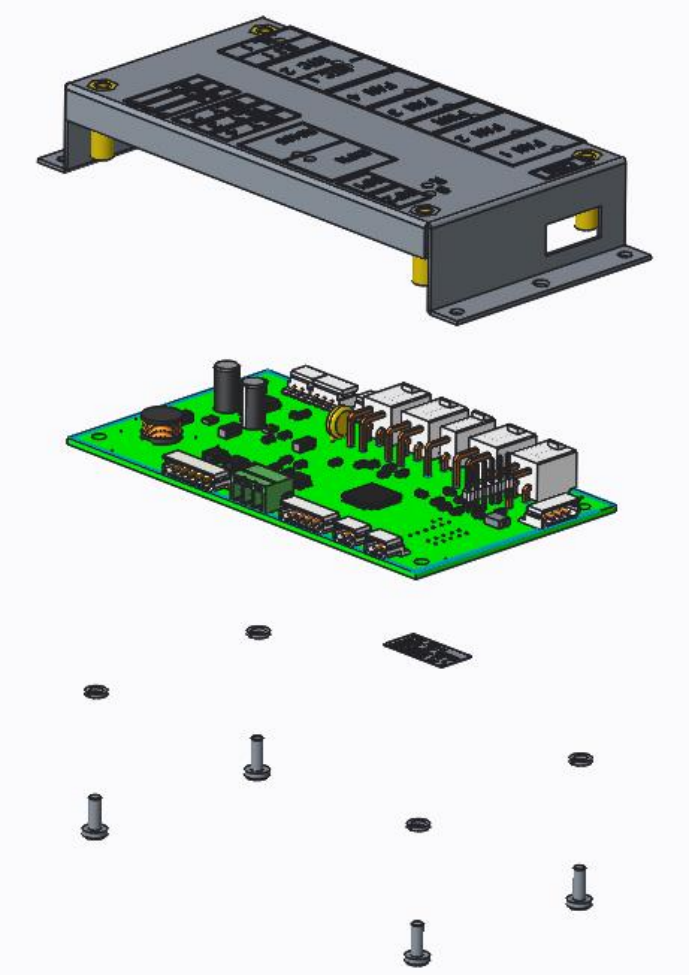

8.2 Take back policy

As part of our commitment to minimise the disposal of Waste Electrical and Electronic Equipment (WEEE) customers can return the device at the end of its life. Please contact us on 01245 468555 for details and issue of an end-of-life RMA number.

www.ebmpapst.co.uk

ebmpapst

engineering a better life



ebm-papst UK Ltd
Chelmsford, Essex
CM2 5EZ, UK

+44 (0)1245 468555
info@uk.ebmpapst.com