Technical data sheet
Polarized retro-reflective photoelectric sensor
Part no.: 50138203
PRK3C.A3/6T-M8



For Illustration purposes only

Contents

- Technical data
- Dimensioned drawings
- Electrical connection
- Diagrams
- Operation and display
- Part number code
- Accessories

Technical data

Basic data

Series	3C
Operating principle	Reflection principle

Special version

Special version	Autocollimation
	Teach input

Optical data

Operating range	0 ... 4 m (guaranteed operating range), With reflector TK(S) 100x100
Operating range limit	0 ... 5 m (typical operating range), With reflector TK(S) 100x100
Light source	LED, Red
Wavelength	635 nm
Transmitted-signal shape	Pulsed
LED group	Exempt group (in acc. with EN 62471)

Electrical data

Protective circuit	Polarity reversal protection
	Short circuit protected

Performance data

Supply voltage U_B	10 ... 30 V, DC, Incl. residual ripple
Residual ripple	0 ... 15 %, From U_B
Open-circuit current	0 ... 15 mA

Inputs

Number of teach inputs	1 Piece(s)

Teach inputs

Type	Teach input
Voltage type	DC
Switching voltage	high: ≥ 0.65 x U_B
	low: ≤ 0.35 x U_B
Delay	1 ms
Input resistance	20,000 Ω

Teach input 1

Assignment	Connection 1, pin 2
Function	Keyboard lockout
	Light/dark switching
	Sensitivity adjustment
Active switching state	High

Outputs

Number of digital switching outputs	1 Piece(s)

Switching outputs

Type	Digital switching output
Voltage type	DC
Switching current, max.	100 mA
Switching voltage	high: ≥(U_B-2V)
	low: ≤ 2 V

Switching output 1

Assignment	Connection 1, pin 4
Switching element	Transistor, Push-pull
Switching principle	Light switching (PNP)/dark switching (NPN)

Time behavior

Switching frequency	1,500 Hz
Response time	0.33 ms
Readiness delay	300 ms
Response jitter	110 µs

Connection

Number of connections	1 Piece(s)

Connection 1

Function	Signal IN
	Signal OUT
	Voltage supply
Type of connection	Connector
Thread size	M8
Type	Male
Material	Metal
No. of pins	4 -pin

Mechanical data

Dimension (W x H x L)	11.4 mm x 34.2 mm x 18.3 mm
Housing material	Plastic
Plastic housing	PC-ABS
Lens cover material	Plastic / PMMA
Net weight	10 g
Housing color	Red
Type of fastening	Through-hole mounting
	Via optional mounting device
Recommended tightening torque for M3 fastening	0.9 N·m
Compatibility of materials	ECOLAB

Operation and display

Type of display	LED
Number of LEDs	2 Piece(s)
Operational controls	Teach button
Function of the operational control	Sensitivity adjustment

Environmental data

Ambient temperature, operation	-40 ... 60 °C
Ambient temperature, storage	-40 ... 70 °C

Certifications

Degree of protection	IP 67
	IP 69K
Protection class	III
Approvals	c UL US
Standards applied	IEC 60947-5-2

Technical data

Customs tariff number	85365019
ECLASS 5.1.4	27270902
ECLASS 8.0	27270902
ECLASS 9.0	27270902
ECLASS 10.0	27270902
ECLASS 11.0	27270902
ECLASS 12.0	27270902
ECLASS 13.0	27270902
ECLASS 14.0	27270902
ECLASS 15.0	27270902
ETIM 5.0	EC002717
ETIM 6.0	EC002717
ETIM 7.0	EC002717
ETIM 8.0	EC002717
ETIM 9.0	EC002717
ETIM 10.0	EC002717

Dimensioned drawings

All dimensions in millimeters

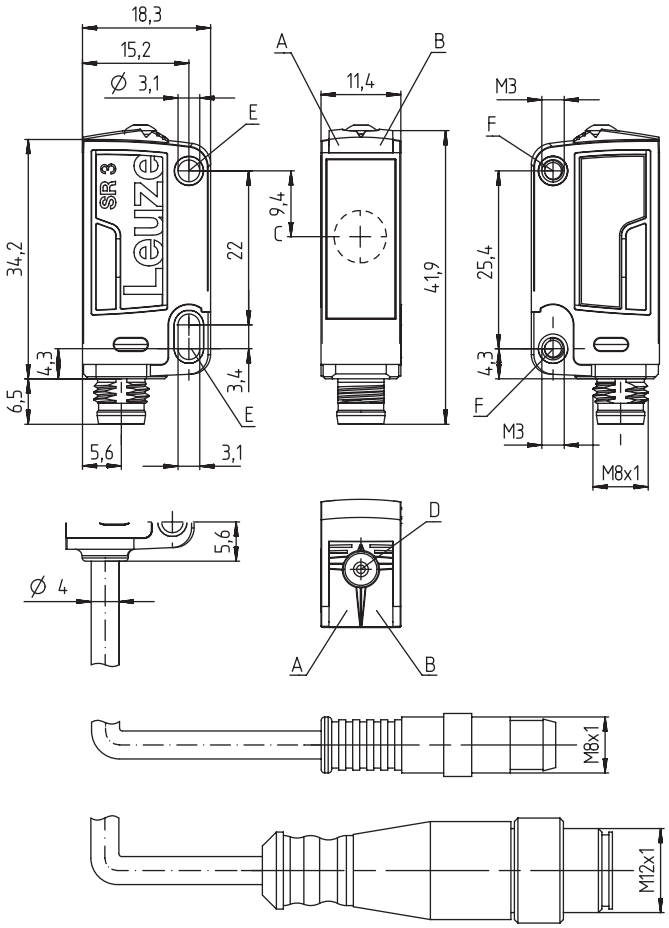

Electrical connection

Connection 1

Function	Signal IN
	Signal OUT
	Voltage supply
Type of connection	Connector
Thread size	M8
Type	Male
Material	Metal
No. of pins	4 -pin

Pin	Pin assignment
1	VIN
2	Teach-in
3	GND
4	OUT 1

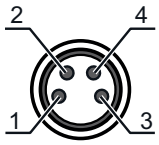

Diagrams

Typ. response behavior

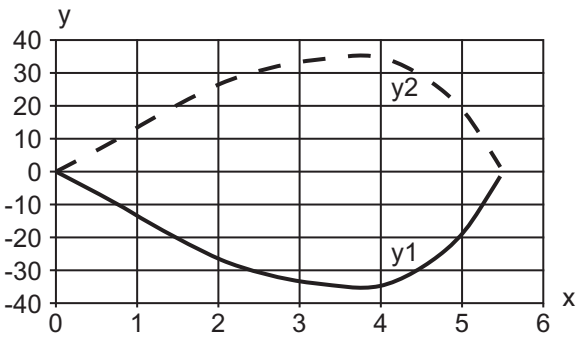

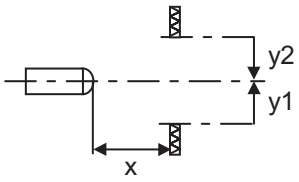

x Distance [m]
y Misalignment [mm]

Typ. function reserve

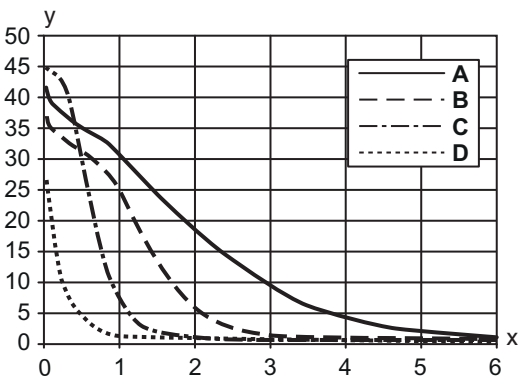

x Distance [m]
y Function reserve

A TKS 100x100
B TKS 40x60
C TKS 20x40
D Film REF 4-A-50x50

Operation and display

LED	Display	Meaning
1	Green, continuous light	Ready
2	Yellow, continuous light	Light path free
	Yellow, flashing	Light path free, no function reserve

Part number code

Part designation: **AAA 3C d EE-f.GG H/i J-K**

AAA3C	**Operating principle / construction** HT3C: Diffuse reflection sensor with background suppression LS3C: Throughbeam photoelectric sensor transmitter LE3C: Throughbeam photoelectric sensor receiver PRK3C: Retro-reflective photoelectric sensor with polarization filter ODT3C: Distance diffuse sensor with background suppression
d	**Light type** n/a: red light I: infrared light
EE	**Light source** n/a: LED L1: laser class 1 L2: laser class 2 PP: Power PinPoint® LED
f	**Preset range (optional)** n/a: operating range acc. to data sheet xxxF: Preset range [mm] 2M: operating range of 2 meters
GG	**Equipment** n/a: standard A: Autocollimation principle (single lens) for positioning tasks B: Housing model with two M3 threaded sleeves, brass F: Permanently set range L: Long light spot S: small light spot T: autocollimation principle (single lens) for highly transparent bottles without tracking TT: autocollimation principle (single lens) for highly transparent bottles with tracking V: V-optics XL: Extra long light spot X: extended model HF: Suppression of HF illumination (LED)
H	**Operating range adjustment** n/a with HT: range adjustable via 8-turn potentiometer n/a with retro-reflective photoelectric sensors (PRK): operating range not adjustable 1: 270° potentiometer 3: teach-in via button 6: auto-teach
i	**Switching output/function OUT 1/IN: Pin 4 or black conductor** 2: NPN transistor output, light switching N: NPN transistor output, dark switching 4: PNP transistor output, light switching P: PNP transistor output, dark switching 6: push-pull switching output, PNP light switching, NPN dark switching G: Push-pull switching output, PNP dark switching, NPN light switching L: IO-Link interface (SIO mode: PNP light switching, NPN dark switching) 8: activation input (activation with high signal) X: pin not used 1: IO-Link / light switching (NPN) / dark switching (PNP)
J	**Switching output / function OUT 2/IN: pin 2 or white conductor** 2: NPN transistor output, light switching N: NPN transistor output, dark switching 4: PNP transistor output, light switching P: PNP transistor output, dark switching 6: push-pull switching output, PNP light switching, NPN dark switching G: Push-pull switching output, PNP dark switching, NPN light switching W: warning output X: pin not used 8: activation input (activation with high signal) 9: deactivation input (deactivation with high signal) T: teach-in via cable

Part number code

K	**Electrical connection** n/a: cable, standard length 2000 mm, 4-wire 5000: cable, standard length 5000 mm, 4-wire M8: M8 connector, 4-pin (plug) M8.3: M8 connector, 3-pin (plug) 200-M8: cable, length 200 mm with M8 connector, 4-pin, axial (plug) 200-M8.3: cable, length 200 mm with M8 connector, 3-pin, axial (plug) 200-M12: cable, length 200 mm with M12 connector, 4-pin, axial (plug)

Note

A list with all available device types can be found on the Leuze website at www.leuze.com.

Accessories

Connection technology - Connection cables

	Part no.	Designation	Article	Description
	50130850	KD U-M8-4A-V1-050	Connection cable	Application: Chemical resistant Connection 1: Connector, M8, Axial, Female, 4 -pin Connector, LED: No Connection 2: Open end Shielded: No Cable length: 5,000 mm Sheathing material: PVC
	50130871	KD U-M8-4W-V1-050	Connection cable	Application: Chemical resistant Connection 1: Connector, M8, Angled, Female, 4 -pin Connector, LED: No Connection 2: Open end Shielded: No Cable length: 5,000 mm Sheathing material: PVC

Mounting technology - Mounting brackets

	Part no.	Designation	Article	Description
	50060511	BT 3	Mounting device	Design of mounting device: Angle, L-shape Fastening, at system: Through-hole mounting Mounting bracket, at device: Screw type Type of mounting device: Rigid Material: Metal

Mounting technology - Rod mounts

	Part no.	Designation	Article	Description
	50117255	BTU 200M-D12	Mounting system	Contains: 2x M3 x 16 screw, 2 M3 x 20 screws, 2x position washers Design of mounting device: Mounting system Fastening, at system: For 12 mm rod, Sheet-metal mounting Mounting bracket, at device: Screw type, Suited for M3 screws Type of mounting device: Clampable, Adjustable, Turning, 360° Material: Metal

Accessories

	Note
	A list with all available accessories can be found on the Leuze website in the Download tab of the article detailed page.