E21216

Mounting set with protective cover for photoelectric sensors

O4 PROTECTIVE BRACKET 500

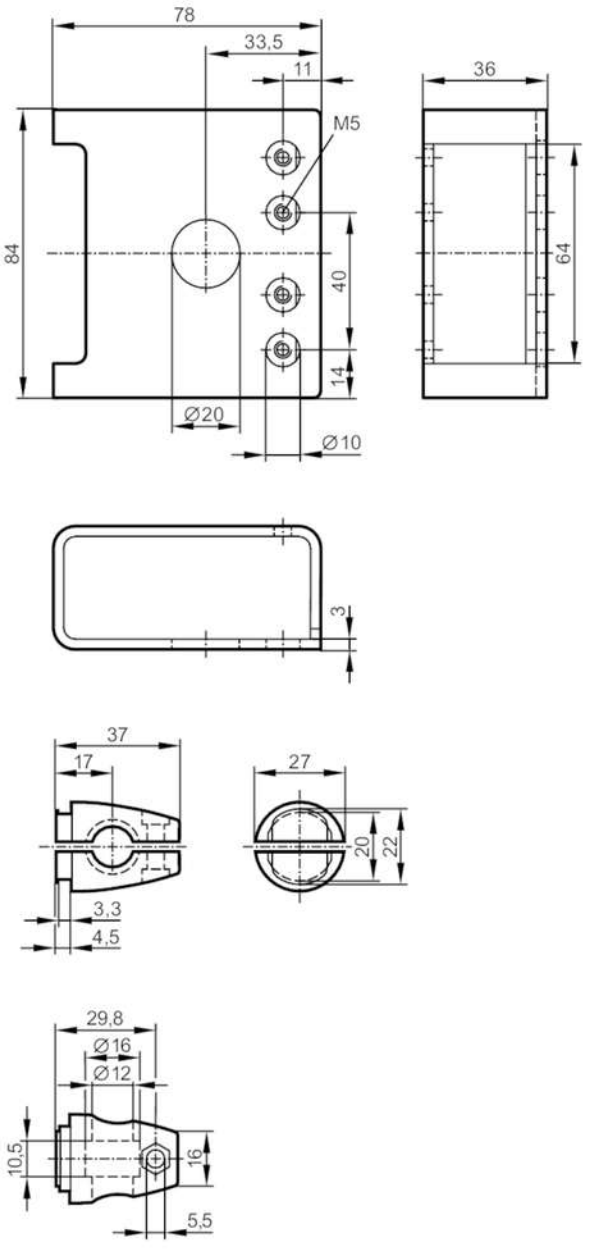

Application		
Design		clamp mounting, with protective cover
Mechanical data		
Weight	[g]	384
Type of mounting		Mounting rod; (Ø 12 mm)
Materials		stainless steel (1.4404 / 316L); Clamp: stainless steel
Accessories		
Items supplied		head cap screw: 1 x M5 x 16
		cylinder screws: 2 x M5 x 30
Remarks		
Pack quantity		1 pcs.