IN5280

Inductive dual sensor for valve actuators

IND3004-BPKG/US-100-KPS/A2

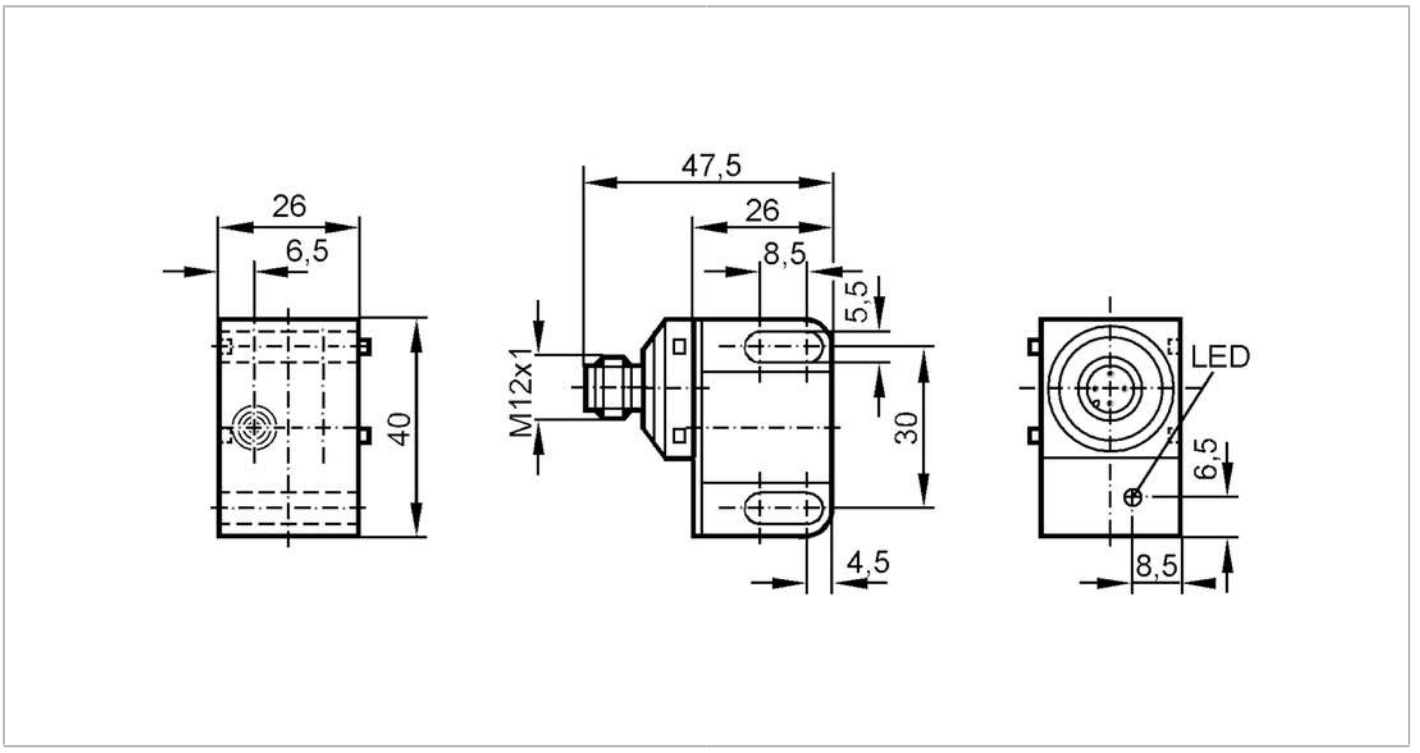

Product characteristics		
Electrical design		PNP
Output function		normally open
Sensing range	[mm]	4
Housing		rectangular
Dimensions	[mm]	26 x 40 x 47.5
Electrical data		
Operating voltage	[V]	10...36 DC
Current consumption	[mA]	15; (36 V)
Protection class		II
Reverse polarity protection		yes
Outputs		
Electrical design		PNP
Output function		normally open
Max. voltage drop switching output DC	[V]	2.5
Permanent current rating of switching output DC	[mA]	250
Switching frequency DC	[Hz]	1300
Short-circuit protection		yes
Type of short-circuit protection		pulsed
Overload protection		yes

IN5280

Inductive dual sensor for valve actuators

IND3004-BPKG/US-100-KPS/A2

Detection zone			
Sensing range	[mm]	4	
Real sensing range Sr	[mm]	4 ± 10 %	
Operating distance	[mm]	0...3.25	
Accuracy / deviations			
Correction factor		steel: 1 / stainless steel: 0.7 / brass: 0.4 / aluminium: 0.3 / copper: 0.2	
Hysteresis	[% of Sr]	1...15	
Switch point drift	[% of Sr]	-10...10	
Operating conditions			
Ambient temperature	[°C]	-25...80	
Protection		IP 67	
Tests / approvals			
EMC		EN 60947-5-2	
		EN 55011	class B
MTTF	[years]	1883	
Mechanical data			
Weight	[g]	56	
Housing		rectangular	
Mounting		non-flush mountable	
Dimensions	[mm]	26 x 40 x 47.5	
Materials		housing: PBT	
Displays / operating elements			
Display		switching status	1 x LED, yellow
Remarks			
Pack quantity		1 pcs.	

Electrical connection - plug

Connector: 1 x M12; coding: A; Moulded body: stainless steel (303/1.4305)



IN5280

Inductive dual sensor for valve actuators

IND3004-BPKG/US-100-KPS/A2

Connection

