TENSATOR®

RB1 Rollabarrier®

The patented Rollabarrier® system is both portable & stable.
Featuring two wheels, which allows quick & easy movement of the posts.

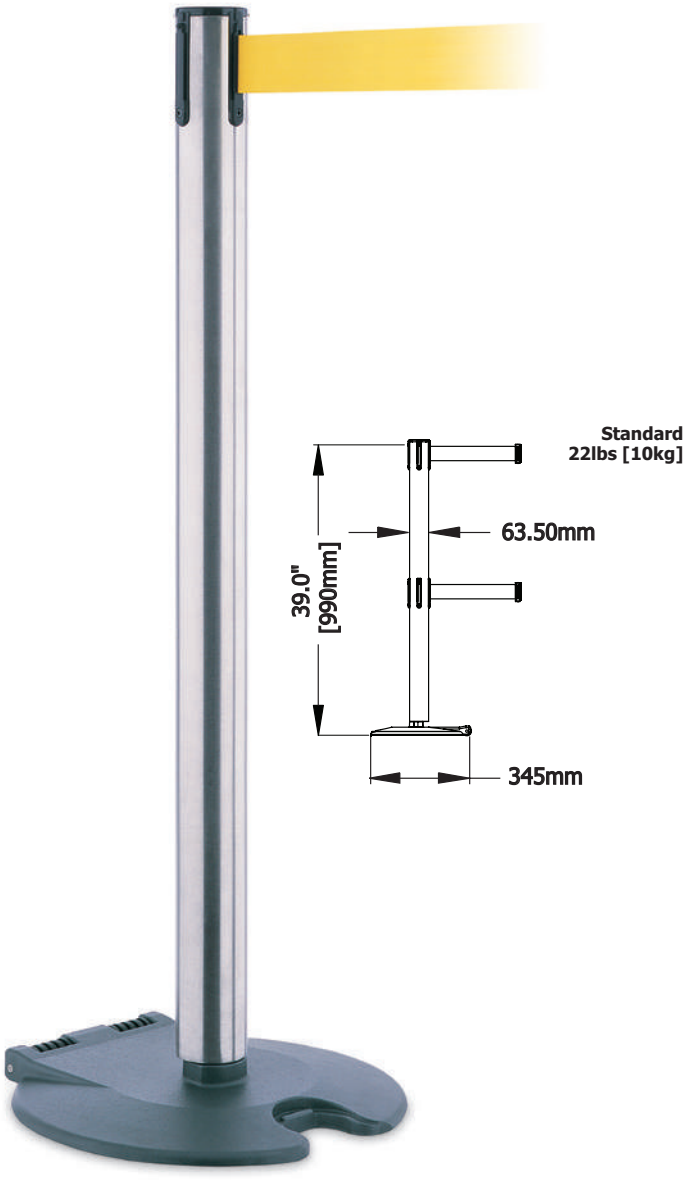

Features

- Up to three posts can be stacked together for easy deployment & compact storage
- Wheels enable easy movement of the posts
- Post available in the full range of colours & finishes
- Modular cassette design offering four-point anti-tamper connection as standard
- Rollabarrier base is available in Hammer Grey as standard
- Constant torque webbing retraction
- [redacted] tape ends for user specified applications: Anti-tamper, [redacted]
- 2.3m [redacted] webbing options
- Accommodates the full range of sign holders

Benefits

- Takes up to 50% less storage than a standard post
- Stackable for easy storage & movement
- The posts don't have to be lifted to be moved, simply tip back onto the wheels and guide away
- Very easy to move up to 3 units at one time
- Ideal for ever changing queue layouts
- The ultimate in flexibility, the Tensabarrier® is easy to set up and simple to store
- Guide & inform your customers & employees
- Easily achieve the optimum queue layout for your floor space
- Reduces customer stress by removing ambiguity as to where the customer should queue and by providing separation between individuals and queue lines
- Durable & hardwearing dye print that does not scratch or deteriorate
- Digitally printed webbing offers branding opportunities

Applications

- Very popular within the airport sector

height	990mm	tube O.D.	63.50mm
base dia.	345mm	weight	10kg

MILTON KEYNES +44 1908 684600
NEW YORK +1 631 666 0300
DUBAI +971 4 2997228
PARIS +33 1 43 09 85 00
FRANKFURT +49 69 3003 890-0
WROCLAW +48 71 359 3800

www.tensatorgroup.com

Owing to the dynamic nature of our business, specifications are constantly being changed and therefore this literature is for informational purposes only. For the most up to date information, please visit our website www.tensatorgroup.com. Tensator makes no warranties, express or implied, in this document. E&OE.