Miniature Toggle Switches waterproof

Specifications:

Contact rating:	250 V AC, 3 A / 125 V AC, 6 A 30 V DC, 4 A / 12 V DC, 5 A 6 V DC, 6 A
Contact resistance:	< 10 mΩ
Insulation resistance:	> 1000 MΩ at 500 V DC
Dielectric strength:	1500 V, 50 Hz for the duration of 1 minute
Operating temperature:	– 45° to + 140° C
Mechanical life:	minimum 100 000 operations
Contacts:	coin silver (common contact copper alloy, silver-plated) also available gold-plated, version B and G (see page 4)
Terminals:	solder tags, copper alloy silver-plated further terminal versions see page 8
Water proofing:	30 minutes at 1 m water column; IP 67
Sealing:	neoprene O-rings between toggle/bushing and bushing/panel
Material:	case: diallyle-phthalate, meets UL 94 V–0, black lever: chromium-plated, metal parts: nickel-plated
Mounting:	bushing M 6 x 0,75 locking through flat bush, key 9 mm
Soldering conditions:	hand-soldering – max.: 60 W, 3 sec, 420° C auto-soldering – max.: 5 sec, 270° C

Accessories:

Plastic caps (height 11,5 mm)

orange	C 1103
blue	C 1104
black	C 1105
green	C 1106
grey	C 1107
yellow	C 1108
red	C 1109
white	C 1110



Models: Switching functions

S P D T	●		
MTE 106 D	on	–	on
MTE 106 E	on	off	on
MTE 106 F	mom	–	on
MTE 106 G	mom	off	mom
MTE 106 H*	mom	off	on

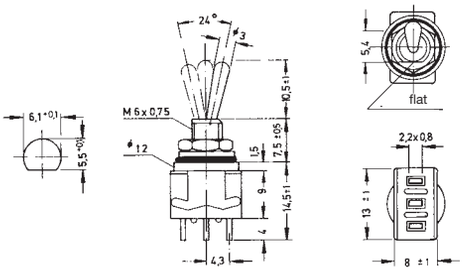



D P D T			
MTE 206 N	on	–	on
MTE 206 P	on	off	on
MTE 206 R	mom	–	on
MTE 206 S	mom	off	mom
MTE 206 T	mom	off	on
measures: a = 9, b = 14,5 ±1			
MTE 206 PA	on	on	on
MTE 206 SA*	mom	on	mom
MTE 206 TA*	mom	on	on
measures: a = 11,5, b = 17 ±1			

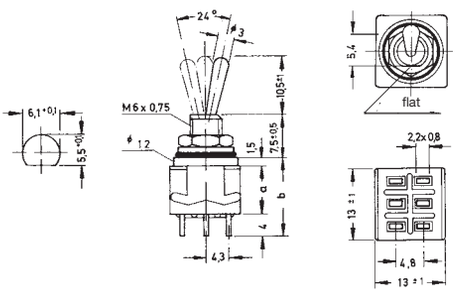



3 P D T			
MTE 306 D	on	–	on
MTE 306 E	on	off	on
MTE 306 F*	mom	–	on
MTE 306 G*	mom	off	mom
MTE 306 H*	mom	off	on

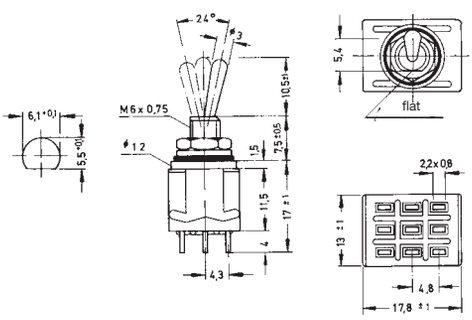



4 P D T			
MTE 406 N	on	–	on
MTE 406 P	on	off	on
MTE 406 R*	mom	–	on
MTE 406 S*	mom	off	mom
MTE 406 T*	mom	off	on
MTE 406 PA*	on	on	on
MTE 406 SA*	mom	on	mom
MTE 406 TA*	mom	on	on

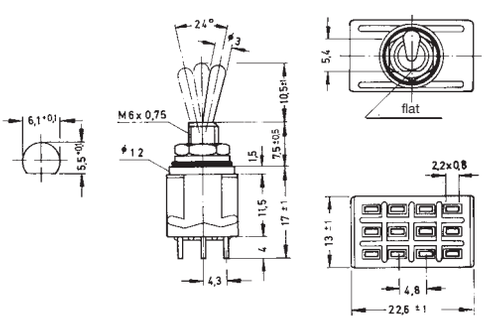



* Non-stock item; minimum quantity and delivery time on request.