OY011S

Safety light curtain

OYA1810-14-4-06-P-1

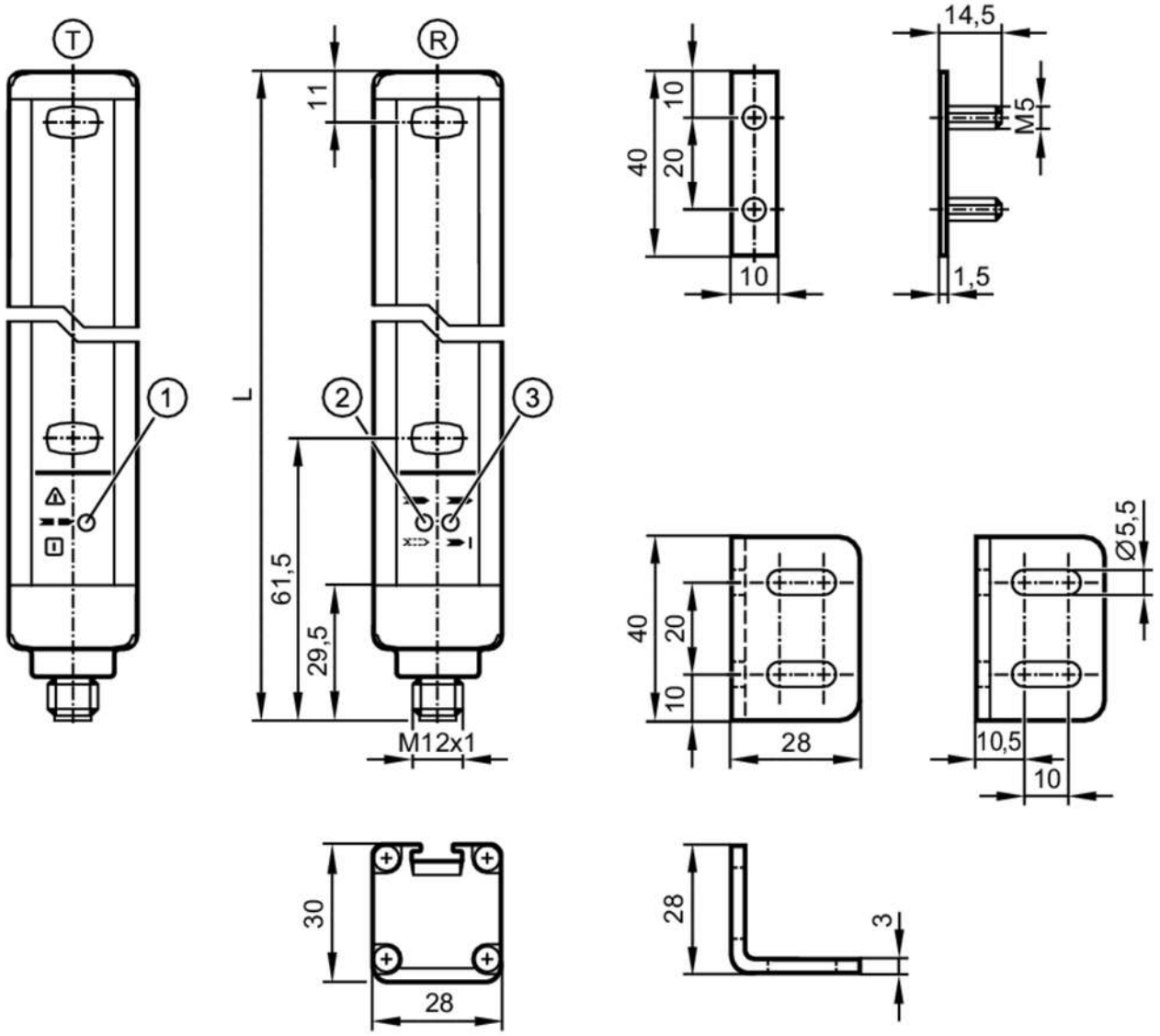

T	transmitter
R	receiver
1	LED three-colour red / green / orange
2	LED 2-colour yellow/blue
3	LED 2-colour red/green

Product characteristics		
Type of light		infrared light
Electrical design		PNP
Protection		IP 65; IP 67
Application		
Protective function		access prevention finger protection
Electrical data		
Operating voltage tolerance	[%]	20
Operating voltage	[V]	24 DC

OY011S

Safety light curtain

OYA1810-14-4-06-P-1

Protection class		III
Reverse polarity protection		yes
Power-on delay time	[s]	< 2
Type of light		infrared light
Receiver		
Current consumption	[mA]	83
Transmitter		
Current consumption	[mA]	42
Outputs		
Electrical design		PNP
Number of OSSD outputs		2
Max. current load per OSSD output	[mA]	400; (24 V)
Short-circuit protection		yes
Detection zone		
Protected area height	[mm]	1810
Resolution (detection capacity d)	[mm]	14
Protection area width (low light intensity)	[m]	0...3
Protection area width (high light intensity)	[m]	1...6
Response times		
Response time	[ms]	20
Operating conditions		
Applications		class C to EN 60654-1 weatherproof application
Ambient temperature	[°C]	-10...55
Max. relative air humidity	[%]	95
Protection		IP 65; IP 67
Tests / approvals		
EMC		IEC 61496-1
Shock resistance		IEC 61496-1
Vibration resistance		IEC 61496-1
Safety classification		
ESPE type (IEC 61496-1)		4
Complies with the requirements		ISO 13849-1: 2015 category 4, PL e IEC 61508 SIL 3 IEC 62061 SIL 3
Mission time TM	[h]	175200
PFH	[1/h]	3,7E-08
Mechanical data		
Weight	[g]	5800
Dimensions	[mm]	1863 x 28 x 30
Materials		housing: aluminium; front pane: PC
Length L	[mm]	1863

OY011S

Safety light curtain

OYA1810-14-4-06-P-1

Displays / operating elements		
Display		LED, yellow
		LED, green
		LED, red
		LED, blue
		LED, orange

Accessories	
Items supplied	mounting bracket: 6
	slot nuts: 6
	Nuts

Remarks	
Pack quantity	1 pcs.

Electrical connection - receiver

Connector: 1 x M12; coding: A; Maximum cable length: 100 m; for wire cross-section 0.34 mm²



Connection

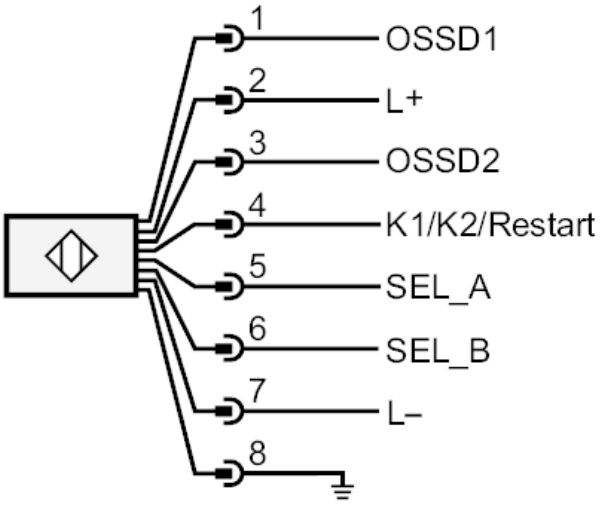

OY011S

Safety light curtain

OYA1810-14-4-06-P-1

Electrical connection - transmitter

Connector: 1 x M12; coding: A

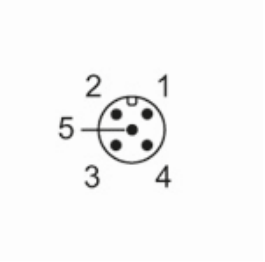

Connection

