DATA SHEET

Type 6213

bürkert
FLUID CONTROL SYSTEMS







Servo-assisted 2/2 way diaphragm valve

- Servo-assisted diaphragm with diameter of up to DN40
- Spring coupled diaphragm opens without differential pressure
- Damped design for quiet closing
- Compact construction with high flow rate
- Energy-saving double coil technology with kick and drop design

Product variants described in the data sheet may differ from the product presentation and description.

Can be combined with



Type 2518 ▸
Cable Plug
DIN EN 175301-803 - Form A



Type 2513 ▸
Cable plug according to DIN EN 175301-803 connector shape A



Type 1087 ▸
Timer

Type description

The 6213 EV valve is a servo-assisted solenoid valve of the S.EV series. The spring coupling of the diaphragm supports the opening process of the valve. In its standard version, the valve is suitable for use in liquids. A minimum differential pressure is required for complete opening. A special version (HP00) which opens the valve without differential pressure is available for gas and vacuum applications. Various diaphragm material combinations are available depending on the application. The range of housing includes brass, stainless steel and gunmetal. Dezincification-resistant brass is available for other markets. To reduce power consumption in operation, coils with "Kick and Drop" (KD) electronics (double coil technology) are available. In combination with a plug in accordance with DIN EN 175301-803 Form A, the valves satisfy protection class IP65 – in combination with a stainless steel housing NEMA 4X.

DTS 1000115690 EN Version: Z Status: RL (released | freigegeben | validé) printed: 13.12.2021

© Christian Bürkert GmbH & Co. KG, Subject to alteration

Visit product website ▸

Table of contents

1. General technical data 3

2. Circuit functions 4

3. Materials 4

3.1. Chemical Resistance Chart – Bürkert resistApp....4
3.2. Material specifications....4

4. Dimensions 5

4.1. Standard version in brass and stainless steel....5
4.2. Gunmetal version with external thread....6
4.3. Coil dimension....7
4.4. Explosion-proof version ATEX + IECEx....8

5. Performance specifications 9

5.1. Power consumption....9

6. Ordering information 9

6.1. Bürkert eShop – Easy ordering and quick delivery....9
6.2. Bürkert product filter....9
6.3. Ordering chart....10
Brass body....10
HP00 version with brass body....11
Stainless steel body....11
HP00 version with stainless steel body....12
Gunmetal housing with external thread....13
6.4. Ordering chart accessories....14
Cable plug Type 2518, form A acc. to DIN EN 175301-803....14
Cable plug Type 2513, form A acc. to DIN EN 175301-803....14
Timer Type 1087, form A acc. to DIN EN 175301-803....14

DTS 1000115690 EN Version: Z Status: RL (released | freigegeben | validé) printed: 13.12.2021

1. General technical data

Product properties	
Dimensions	Detailed information can be found in chapter "4. Dimensions" on page 5.
Materials	
Body	Brass acc. to DIN EN 50930-6 Stainless steel 1.4408 Gunmetal (external thread) DN10…DN20
Coil	Polyamide, epoxy (insulation class H)
Seal	NBR, FKM, EPDM
Inner part of valve	Brass body: Brass, stainless steel and PPS Stainless steel body: Stainless steel and PPS Gunmetal body: Stainless steel and PPS (external thread) DN10…DN20
Orifice	Standard: DN10…DN40 HP00: DN13…DN20
Switching function	Detailed information can be found in chapter "2. Circuit functions" on page 4.
Performance data	
Response times[1.] AC / DC	
DN10…DN13	Opening: 10…100 ms Closing: 100…200 ms
DN20	Opening: 200…300 ms Closing: 400…700 ms
DN25…DN40	Opening: 300…400 ms Closing: 800…1400 ms
Electrical data	
Operating voltage	Standard: 024/DC, 024/50, 230/50, 110/50, 120/60 HP00: 24 V (50…60 Hz), 230 V (50…60 Hz)
Power consumption	Depending on orifice and coil size For detailed information, see "5. Performance specifications" on page 9
Voltage tolerance	±10 %
Duty cycle	100 % continuous rating; KD coil; max. rating 6 circuit switches/minute
Medium data	
Medium temperature	
NBR	-10 °C… +80 °C
FKM	0 °C… +90 °C with polyamide coil 0 °C… +120 °C with epoxy coil
EPDM	-30 °C… +90 °C with polyamide coil -30 °C… +100 °C with epoxy coil
Operating medium	
NBR	Neutral fluids, water, hydraulic oil, oil without additives
FKM	Per-solutions, hot oils with additives
EPDM	Oil and fat-free fluids and gases
Viscosity	Max. 21 mm^2/s
Process/Port connection & communication	
Electrical connection	Tag connector acc. to DIN EN 175 301-803 Form A (see "6.4. Ordering chart accessories" on page 14)
Approvals and certificates	
Protection class	IP65 with cable plug and cable connection IP65 with terminal box (further versions on request)
Environment and installation	
Installation	As required, preferably with actuator upright
Ambient temperature	Max. +55 °C

1.) Measurement with water at valve outlet 6 bar and +20 °C. Opening: Pressure build-up 0 to 90 %, Closing: Pressure drop 100 to 10

DTS 1000115690 EN Version: Z Status: RL (released | freigegeben | validé) printed: 13.12.2021

2. Circuit functions

Circuit functions	Description
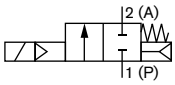	**Type: A, solenoid valve** 2/2 way Servo-controlled Normally closed

3. Materials

3.1. Chemical Resistance Chart – Bürkert resistApp



Bürkert resistApp – Chemical Resistance Chart

You want to ensure the reliability and durability of the materials in your individual application case? Verify your combination of media and materials on our website or in our resistApp.

Start Chemical Resistance Check

3.2. Material specifications

Note:
The sectional view shown corresponds to the standard version. For other versions and nominal diameters, the sectional view varies.

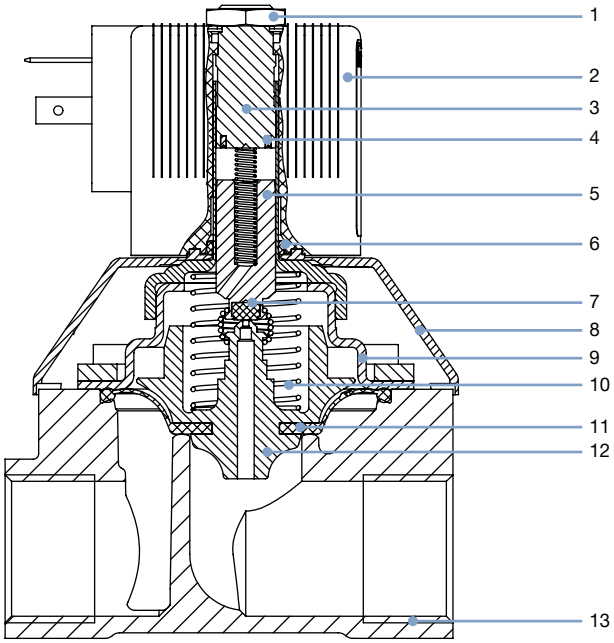

No.	Element	Material
1	Locknut	Steel (surface thick-film passivated acc. to RoHS) Stainless steel 1.4305, PTFE coated
2	Coil	Polyamide or Epoxy
3	Stopper	Stainless steel 1.4113
4	Shading ring (only AC version)	with Brass body: Copper (Cu) with Stainless steel body: Silver (Ag)
5	Magnetic core	Stainless steel 1.4113
6	O-Ring	FKM
7	Plunger seal	NBR, FKM, EPDM
8	Bonnet	PA6
9	Cover	DN10…DN25: Stainless steel 1.4301 DN40: Brass, stainless steel 1.4408
10	Spring	Stainless steel 1.4310
11	Diaphragm	NBR, FKM, EPDM
12	Diaphragm support	PPSGF40 in combination with brass and accordingly stainless steel parts
13	Valve body	Brass, stainless steel 1.4408 Gunmetal with external thread

DTS 1000115690 EN Version: Z Status: RL (released | freigegeben | validé) printed: 13.12.2021

DTS 1000115690 EN Version: Z Status: RL (released | freigegeben | validé) printed: 13.12.2021

4. Dimensions

4.1. Standard version in brass and stainless steel

Note:

- Dimensions in mm
- The dimensions F1 and G 1 apply to G-threads
- The dimensions F2 and G 2 apply to NPT-threads
- The dimensions F3 and G 3 apply to RC-threads

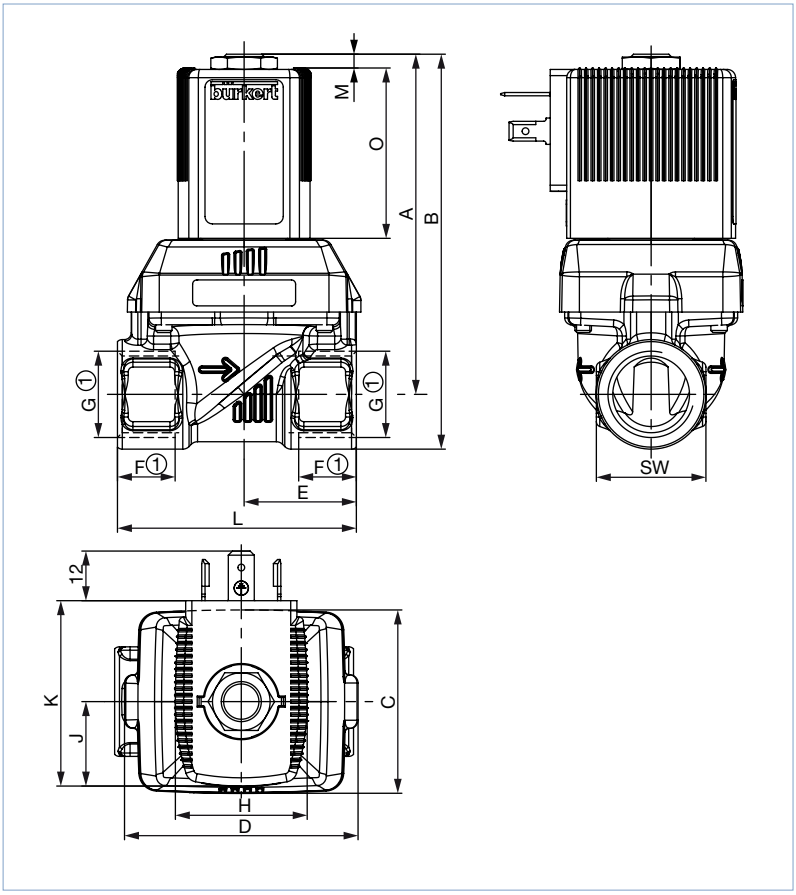

DN	A	B	C	D	E	G		NPT		Rc		L	SW	Coil size
					(MS/VA)	F1	G 1	F2	G 2	F3	G 3	(MS/VA)		
10	71.1	82.1	36	46	22	12	G ¼	10.0	NPT ¼	-	-	50	22	5 and 6
						12	G ⅜	10.3	NPT ⅜	10.1	Rc ⅜			
10[1.)]	73.1	86.6			24.5	14	G ½	13.7	NPT ½	13.2	Rc ½	50	27	
10[2.)]												55		
13[1.)]	82.6	95.9	44.5	56.7	27.25	14	G ½	13.7	NPT ½	13.2	Rc ½	58	27	5 and 6
13[2.)]					32.5							65		
13	84.6	100.6			32.5	16	G ¾	14	NPT ¾	14.5	Rc ¾	65	32	
20	97.1	113.1	65	76.6	37	16	G ¾	14	NPT ¾	14.5	Rc ¾	80	32	5 and 6
20	99.6	120.1			37.5	18	G 1	16.8	NPT 1	16.8	Rc 1	80	41	
13[1.)]	109.3	122.8	44.5	56	27.25	14	G ½	13.7	NPT ½	13.2	Rc ½	58	27	K and L
13[2.)]					32.5							65		
13	111.3	127.3			32.5	16	G ¾	14	NPT ¾	14.5	Rc ¾	65	32	
20	123.9	139.9	65	76.6	37	16	G ¾	14	NPT ¾	14.5	Rc ¾	80	32	K and L
20	126.4	146.9			37.5	18	G 1	16.8	NPT 1	16.8	Rc 1	80	41	
25	143.4	163.4	77	88	46	18	G 1	16.8	NPT 1	16.8	Rc 1	95	41	K and L
25	148.3	173.3			46	20	G 1¼	17.3	NPT 1¼	19.1	Rc 1¼	95	50	

DN	A	B	C	D	E	G		NPT		Rc		L	SW	Coil size
					(MS/VA)	F1	G 1	F2	G 2	F3	G 3	(MS/VA)		
40[1.)]	153.9	178.9	104.5	117	61	20	G 1¼	17.3	NPT 1¼	19.1	Rc 1¼	126	50	K and L
40	159.4	189.4			61	22	G 1½	17.3	NPT 1½	19.1	Rc 1½	126	60	
40	165.4	200.4			64	24	G 2	17.6	NPT 2	23.4	Rc 2	132	70	

1.) only as brass thread port version

2.) only as stainless steel thread port version

4.2. Gunmetal version with external thread

Note:
Dimensions in mm

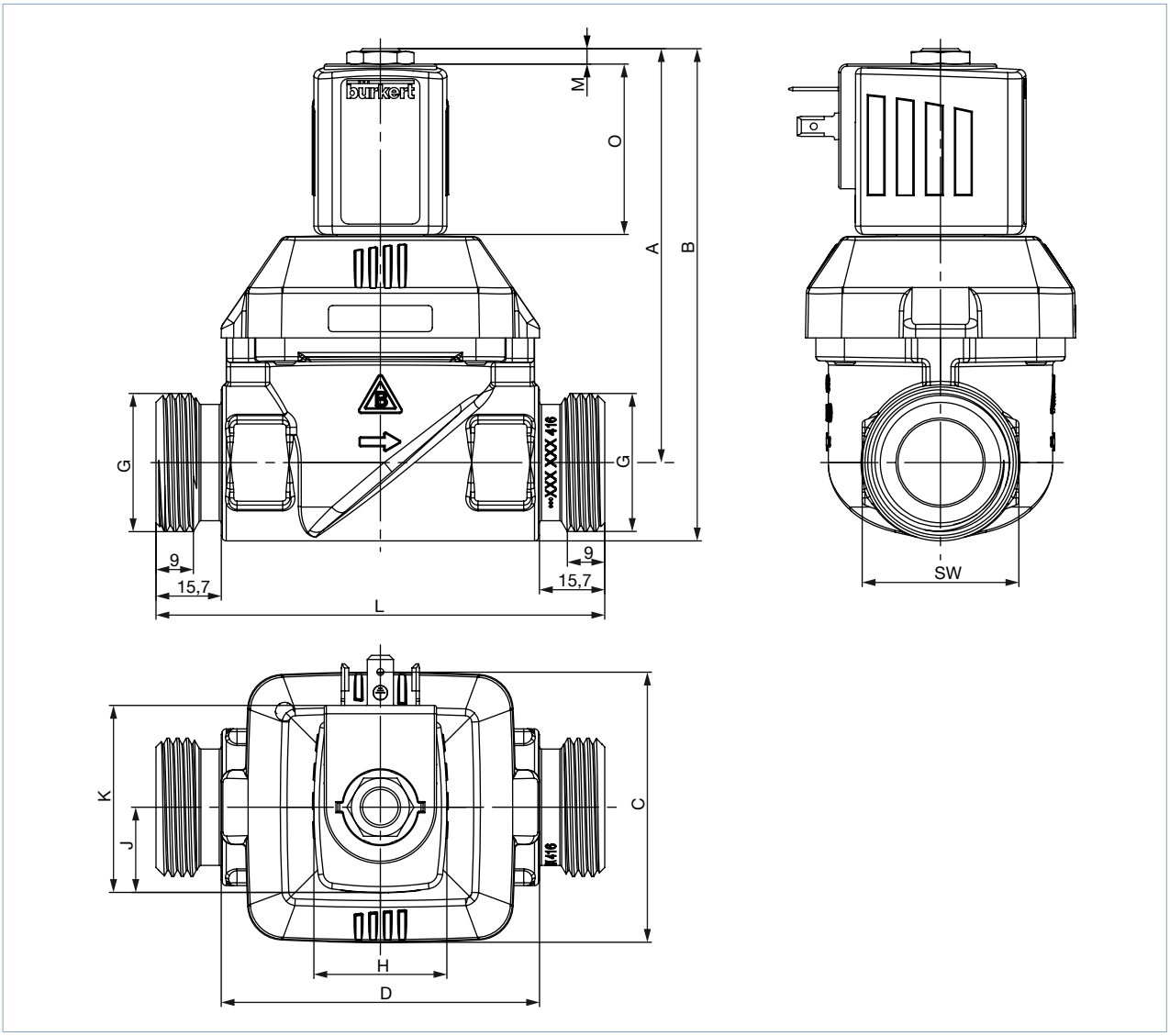

DN	A	B	C	D	G	L	SW	Coil size
10	73.1	86.1	36	46	G ½	80	26	5 and 6
13	84.6	100.6	44.5	56.7	G ¾	89	32	5 and 6
20	99.6	118.5	65	76.6	G 1	108	37.7	5 and 6
13	104.3	120.3	44.5	56.7	G ¾	89	32	K and L
20	119.3	139.8	36	76.6	G 1	108	37.7	K and L

DTS 1000115690 EN Version: Z Status: RL (released | freigegeben | validé) printed: 13.12.2021

4.3. Coil dimension

Note:
Dimensions in mm

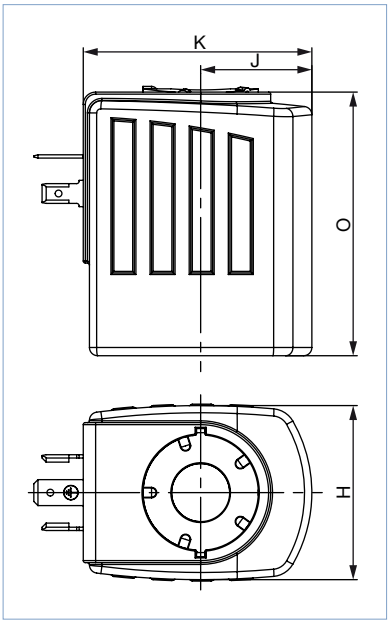

Coil size	H	J	K	O	M
5	32	20.5	45	41	3.4
6	40	23.5	51	41	3.4
K	42	27	55.5	64	7
L	65	37.5	72	64	7

DTS 1000115690 EN Version: Z Status: RL (released | freigegeben | validé) printed: 13.12.2021

4.4. Explosion-proof version ATEX + IECEx

Note:
Coil with terminal box and cable gland or coil with cable connection on request.

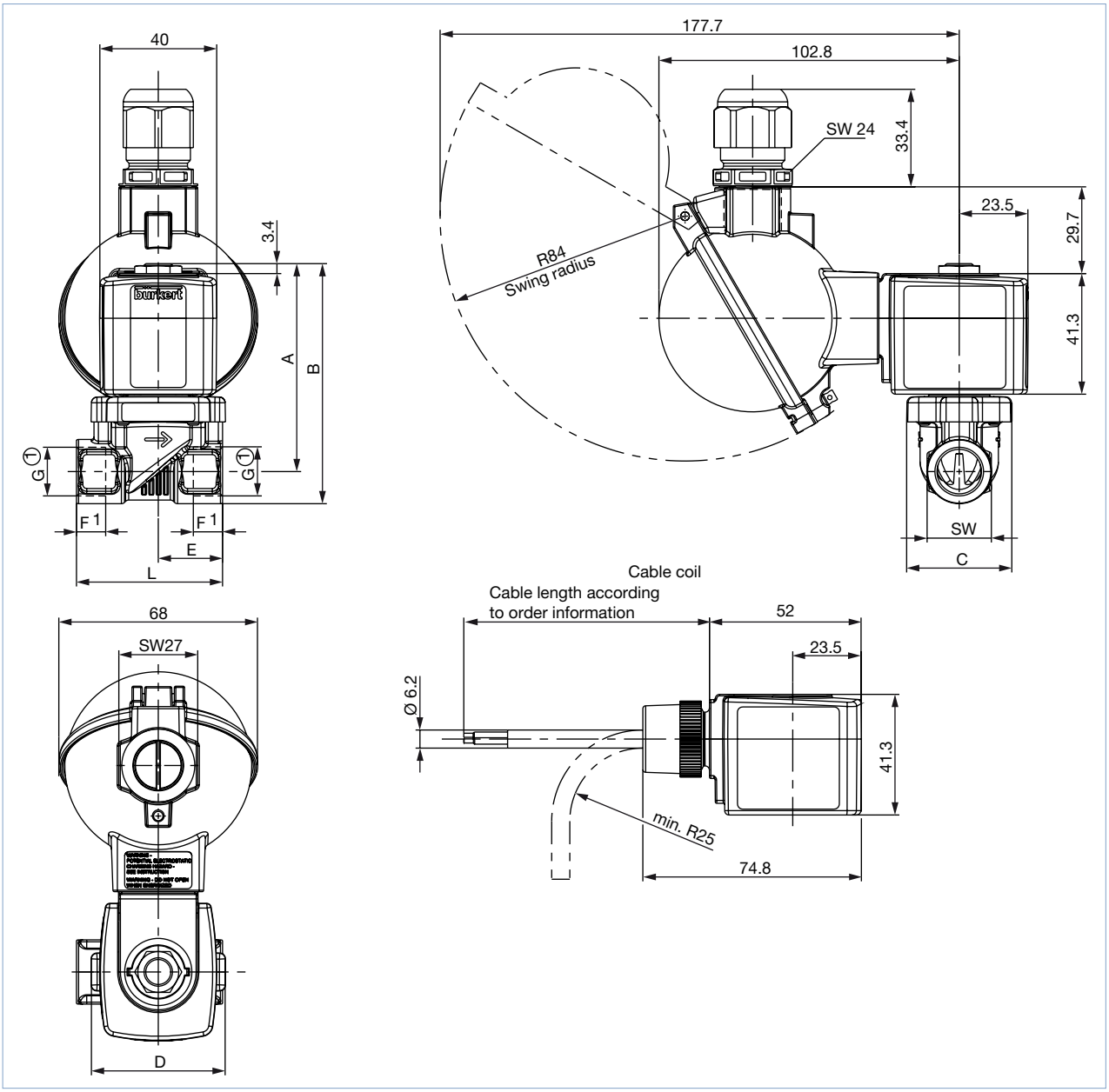

DN	A	B	C	D	E	G		NPT		Rc		L	SW
						F1	G 1	F2	G 2	F3	G 3		
10	71.2	82.2	36	45.6	22	12	G ¼	10	NPT ¼	–	–	50	22
							G ⅜	10.3	NPT ⅜	10.1	Rc ⅜		
	73.2	86.7			24.5	14	G ½	13.7	NPT ½	13.2	Rc ½		27
												55	
13	82.7	96	44.5	56.7	27.25	14	G ½	13.7	NPT ½	13.2	Rc ½	58	27
					32.5							65	
	84.7	100.7				16	G ¾	14	NPT ¾	14.5	Rc ¾		32
20	97.2	113.2	65	76.6	37	16	G ½	14	NPT ¾	14.5	Rc ¾	80	
	99.7	120.2			37.5	18	G 1	16.8	NPT 1	16.8	Rc 1		41

DTS 1000115690 EN Version: Z Status: RL (released | freigegeben | validé) printed: 13.12.2021

5. Performance specifications

5.1. Power consumption

Nominal size	Coil size		AC			DC		KD coil AC/DC[2.]		
								AC	DC	AC/DC
			Inrush	Hold		Cooling capacity	Heat performance	Cooling capacity[1.] Inrush (500 ms)	Cooling capacity[1.] Hold	Heat performance Hold
[mm]	[mm]	SG	[VA]	[VA]	[W]	[W]	[W]	[W] [VA]	[W]	[W]
10	32	5	34	14	8	–	–	–	–	–
10	40	6	–	–	10	11	10	–	–	–
13	32	5	36	14	8	–	–	–	–	–
13	40	6	–	–	10	11	10	–	–	–
13	42	K	125	37	16	21	16	44	6.5	5.5
20	32	5	38	14	8	–	–	–	–	–
20	40	6	–	–	10	11	10	–	–	–
20	42	K	140	37	16	21	16	44	6.5	5.5
25	42	K	150	37	16	–	–	85	8.5	7
25	65	L	–	–	–	28	21	–	–	–
40	42	K	190	37	16	–	–	85	8.5	7
40	65	L	–	–	–	28	21	–	–	–

1.) Cooling capacity at coil temperature 20 °C

2.) “Kick and Drop” coil (KD coil): Coil with energy-saving “Kick and Drop” electronics in double coil technology

6. Ordering information

6.1. Bürkert eShop – Easy ordering and quick delivery



Bürkert eShop – Easy ordering and fast delivery

You want to find your desired Bürkert product or spare part quickly and order directly? Our online shop is available for you 24/7. Sign up and enjoy all the benefits.

Order online now

6.2. Bürkert product filter



Bürkert product filter – Get quickly to the right product

You want to select products comfortably based on your technical requirements? Use the Bürkert product filter and find suitable articles for your application quickly and easily.

Try out our product filter

DTS 1000115690 EN Version: Z Status: RL (released | freigegeben | validé) printed: 13.12.2021

6.3. Ordering chart

Brass body

Note:

- Please note that the cable plug has to be ordered separately, see "6.4. Ordering chart accessories" on page 14 or separate datasheet **Type 2518** ▶.
- Further versions on request

Circuit function	Port connection	Orifice	K_v value Water[1.) 2.)]	Pressure range[3.)]	Weight (DC)[4.)]	Article no. per voltage/frequency [V/Hz]		
		[mm]	[m³/h]	[bar]	[kg]	024/DC	024/50	230/50
DN10…DN40								
A, solenoid valve 2/2 way Servo-controlled Normally closed 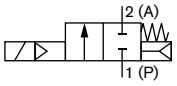 	**NBR Diaphragm, polyamide coil, medium temperature -10…+80 °C**							
	G ¼	10	1.3	0…10	0.3 (0.5)	221674	221675	221677
	G ⅜	10	1.9	0…10	0.3 (0.5)	221598	221599	221601
	G ½	10	1.9	0…10	0.4 (0.5)	221606	221607	221609
	G ½	13	3.6	0…10	0.4 (0.5)	221602	221603	221605
	G ¾	13	3.6	0…10	0.5 (0.6)	221618	221619	221621
	G ¾	20	8.3	0…10	0.7 (0.8)	221630	221631	221633
	G 1	20	8.3	0…10	0.9 (1.0)	221634	221635	221637
	NBR Diaphragm, epoxy coil, medium temperature -10…+80 °C							
	G 1	25	11	0…10	1.6 (2.2)	227533	221725	221728
	G 1¼	25	11	0…10	1.7 (2.3)	227534	221729	221732
	G 1¼	40	23	0…10	2.9 (3.4)	270903	270895	270899
	G 1½	40	30	0…10	3.2 (3.7)	227539	221750	221753
	G 2	40	30	0…10	3.4 (3.9)	227541	221754	221757
	FKM Diaphragm, epoxy coil, medium temperature 0…+120 °C							
	G ¼	10	1.3	0…10	0.3 (0.5)	221678	221679	221681
	G ⅜	10	1.9	0…10	0.3 (0.5)	221610	221611	221613
	G ½	10	1.9	0…10	0.4 (0.5)	221614	221615	221617
	G ½	13	3.6	0…10	0.4 (0.5)	221622	221623	221625
	G ¾	13	3.6	0…10	0.5 (0.6)	221626	221627	221629
	G ¾	20	8.3	0…10	0.7 (0.8)	221638	221639	221641
	G 1	20	8.3	0…10	0.9 (1.0)	221642	221643	221645
	G 1	25	11	0…10	1.6 (2.2)	227537	221733	221736
	G 1¼	25	11	0…10	1.7 (2.3)	227538	221737	221740
	G 1¼	40	23	0…10	2.9 (3.4)	270905	270906	270908
	G 1½	40	30	0…10	3.2 (3.7)	227544	227724	227726
	G 2	40	30	0…10	3.4 (3.9)	227545	227728	227730
	EPDM Diaphragm, polyamide coil, medium temperature -30…+90 °C							
	G ¼	10	1.3	0…10	0.3 (0.4)	221670	221671	221673
	G ⅜	10	1.9	0…10	0.3 (0.4)	221646	221647	221649
	G ½	10	1.9	0…10	0.4 (0.5)	221650	221651	221653
	G ½	13	3.6	0…10	0.4 (0.5)	221654	221655	221657
	G ¾	13	3.6	0…10	0.5 (0.6)	221658	221659	221661
	G ¾	20	8.3	0…10	0.7 (0.8)	221662	221663	221665
	G 1	20	8.3	0…10	0.9 (1.0)	221666	221667	221669

DTS 1000115690 EN Version: Z Status: RL (released | freigegeben | validé) printed: 13.12.2021

Circuit function	Port connection	Orifice	K_V value Water[1.) 2.)]	Pressure range[3.)]	Weight (DC)[4.)]	Article no. per voltage/frequency [V/Hz]		
		[mm]	[m³/h]	[bar]	[kg]	024/DC	024/50	230/50
A, solenoid valve 2/2 way Servo-controlled Normally closed 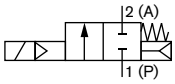	**EPDM Diaphragm, epoxy coil, medium temperature -30…+100 °C**							
	G 1	25	11	0…10	1.6 (2.2)	227535	221717	221720
	G 1¼	25	11	0…10	1.7 (2.3)	227536	221721	221724
	G 1¼	40	23	0…10	2.9 (3.4)	270904	270890	270894
	G 1½	40	30	0…10	3.2 (3.7)	227542	221741	221745
	G 2	40	30	0…10	3.4 (3.9)	227543	221746	221749

1.) Measured at +20 °C, 1 bar[2.)] pressure at valve inlet and free outlet

2.) A minimum differential pressure of 0.5 bar is required for full (100 %) opening

3.) Pressure data [bar]: Overpressure with respect to atmospheric pressure

4.) The values in brackets regarding the weight apply to the DC version

5.)Approved for drinking water according to KTW and W270

HP00 version with brass body

Note:
Preferably used for gas and vacuum applications as well as for liquids with increased flow and tightness requirements at low differential pressure.

Circuit function	Port connection	Orifice	K_V value Water[1.)]	Pressure range[3.)]	Weight (DC)	Article no. per voltage/frequency [V/Hz]		
		[mm]	[m³/h]	[bar]	[kg]	024/DC	024/50–60	230/50–60
DN13…DN20								
A, solenoid valve 2/2 way Servo-controlled Normally closed 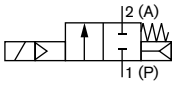	**Brass body, FKM Diaphragm, epoxy coil, medium temperature 0…+120 °C**							
	G ½	13	3.6	0…10	0.8	221706	221705	231574
	G ¾	20	8.3	0…10	1.3	221712	221711	221713
	G 1	20	8.3	0…10	1.4	221715	221714	221716
	Brass body, EPDM Diaphragm, epoxy coil, medium temperature -30…+100 °C							
	G ½	13	3.6	0…10	0.8	221694	221693	221695
	G ¾	20	8.3	0…10	1.3	208422	221699	189592
	G 1	20	8.3	0…10	1.4	221703	221702	221704

1.) Measured at +20 °C, 1 bar[2.)] pressure at valve inlet and free outlet

3.) Pressure data [bar]: Overpressure with respect to atmospheric pressure

Stainless steel body

Circuit function	Port connection	Orifice	K_V value Water[1.) 2.)]	Pressure range[3.)]	Weight (DC)[4.)]	Article no. per voltage/frequency [V/Hz]		
		[mm]	[m³/h]	[bar]	[kg]	024/DC	024/50	230/50
DN10…DN40								
A, solenoid valve 2/2 way Servo-controlled Normally closed 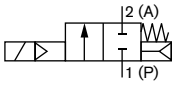	**NBR Diaphragm, polyamide coil, medium temperature -10…+80 °C**							
	G ⅜	10	1.9	0…10	0.3 (0.4)	222150	222151	222152
	G ½	13	3.6	0…10	0.4 (0.5)	222156	222157	222158
	G ¾	20	8.3	0…10	0.7 (0.8)	222168	222169	222170
	G 1	20	8.3	0…10	0.9 (1.0)	222171	222172	222173
	NBR Diaphragm, epoxy coil, medium temperature -10…+80 °C							
	G 1	25	11	0…10	1.6 (2.2)	227546	228429	222193
	G 1¼	25	11	0…10	1.7 (2.3)	227547	228432	222197
	G 1½	40	30	0…10	3.2 (3.7)	227552	228435	222201
	G 2	40	30	0…10	3.4 (3.9)	227554	228438	222205

DTS 1000115690 EN Version: Z Status: RL (released | freigegeben | validé) printed: 13.12.2021

Circuit function	Port connection	Orifice	K_V value Water[1.) 2.)]	Pressure range[3.)]	Weight (DC)[4.)]	Article no. per voltage/frequency [V/Hz]		
		[mm]	[m³/h]	[bar]	[kg]	024/DC	024/50	230/50
A, solenoid valve 2/2 way Servo-controlled Normally closed 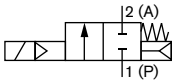	**FKM Diaphragm, epoxy coil, medium temperature 0…+120 °C**							
	G ⅜	10	1.9	0…10	0.3 (0.4)	221758	221759	221761
	G ½	13	3.6	0…10	0.4 (0.5)	221762	221763	221765
	G ¾	20	8.3	0…10	0.7 (0.8)	222122	222123	222125
	G 1	20	8.3	0…10	0.9 (1.0)	222126	222127	222129
	G 1	25	11	0…10	1.6 (2.2)	227550	228430	222143
	G 1¼	25	11	0…10	1.7 (2.3)	227551	228433	222145
	G 1½	40	30	0…10	3.2 (3.7)	227557	228436	222147
	G 2	40	30	0…10	3.4 (3.9)	227558	228439	222149
	EPDM Diaphragm, polyamide coil, medium temperature -30…+90 °C							
	G ⅜	10	1.9	0…10	0.3 (0.4)	222153	222154	222155
	G ½	13	3.6	0…10	0.4 (0.5)	222159	222160	222161
	G ¾	20	8.3	0…10	0.7 (0.8)	222174	222175	222176
	G 1	20	8.3	0…10	0.9 (1.0)	222177	222178	222179
	EPDM Diaphragm, epoxy coil, medium temperature -30…+100 °C							
	G 1	25	11	0…10	1.6 (2.2)	227548	228431	222195
	G 1¼	25	11	0…10	1.7 (2.3)	227549	228434	222199
	G 1½	40	30	0…10	3.2 (3.7)	227555	228437	222203
	G 2	40	30	0…10	3.4 (3.9)	227556	228440	222207

1.) Measured at +20 °C, 1 bar[2.)] pressure at valve inlet and free outlet.

2.) A minimum differential pressure of 0.5 bar is required for full (100 %) opening.

3.) Pressure data [bar]: Overpressure with respect to atmospheric pressure.

4.) The values in brackets regarding the weight apply to the DC version.

HP00 version with stainless steel body

Note:
Preferably used for gas and vacuum applications as well as for liquids with increased flow and tightness requirements at low differential pressure.

Circuit function	Port connection	Orifice [mm]	K_V value Water [m³/h][1.)]	Pressure range [bar][3.)]	Weight [kg] (DC)	Article no. per voltage/frequency [V/Hz]		
						024/DC	024/50–60	230/50–60
DN10…DN40								
A, solenoid valve 2/2 way Servo-controlled Normally closed 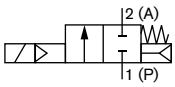	**FKM Diaphragm, epoxy coil, medium temperatureen 0…+120 °C**							
	G ½	13	3.6	0…10	0.8	208694	220585	205351
	G ¾	20	8.3	0…10	1.3	222137	222136	222138
	G 1	20	8.3	0…10	1.4	222140	222139	222141
	EPDM Diaphragm, epoxy coil, medium temperatureen -30…+100 °C							
	G ½	13	3.6	0…10	0.8	213132	222166	220584
	G ¾	20	8.3	0…10	1.3	222186	222187	222188
	G 1	20	8.3	0…10	1.4	222189	222190	222191

1.) Measured at +20 °C, 1 bar[2.)] pressure at valve inlet and free outlet.

3.) Pressure data [bar]: Overpressure with respect to atmospheric pressure.

DTS 1000115690 EN Version: Z Status: RL (released | freigegeben | validé) printed: 13.12.2021

Gunmetal housing with external thread

Circuit function	Port connection	Orifice [mm]	K_v value Water [m³/h][1.) 2.)]	Pressure range [bar][3.)]	Weight [kg] (DC)[4.)]	Article no. per voltage/frequency [V/Hz]		
						024/DC	024/50	230/50
Standard version, EPDM Diaphragm, epoxy coil, medium temperature -30…+100°C[5.)]								
A, solenoid valve 2/2 way Servo-controlled Normally closed 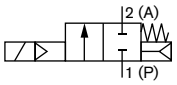 	G ½	10	1.9	0…10	0.4	311670	311674	311679
	G ¾	13	3.6	0…10	0.6	311681	311684	311688
	G 1	20	8.3	0…10	1.1	311691	311693	311696
HP00 version, EPDM Diaphragm, epoxy coil, medium temperature -30…+100°C[5.)]								
	G ¾	13	3.6	0…10	0.6	312248	312249	312250
	G 1	20	8.3	0…10	1.3	312247	312244	312246

1.) Measured at +20 °C, 1 bar[2.)] pressure at valve inlet and free outlet.

2.) A minimum differential pressure of 0.5 bar is required for full (100 %) opening.

3.) Pressure data [bar]: Overpressure with respect to atmospheric pressure.

4.) The values in brackets regarding the weight apply to the DC version.

5.) Approved for drinking water according to KTW and W270

Further versions on request

Process connection
NPT, Rc, welded connection

Temperature
Special temperature ranges

Voltage
Further Voltages available

Material
- Brass dezincification resistant (MZ)
- Nickel-plated brass (5 µm) (AF43)
- Gunmetal with external thread (DN10, DN13, DN20)

Coil
Kick and Drop version: Coil with energy-saving “Kick and Drop” (KD) electronics in double-coil technology (CZ05)

Approval
- Drinking water approval acc. to UBA assessment principles (PF23)
- VDE Approval acc. to DIN EN 60730 (VDE0631) (PW01/PW02)
- Watermark Licence (PF20)
- UL(UL-listed) approval (MH10753) (PE95)
- UR(UL-recognized) approval (PE94)
- NEMA 250 Type 4X
- WRAS approval (PD23) (DN10, DN13, DN20) (PD23)
- Safety shut-off valve for combustion facilities according to DIN EN ISO 23553-1 (PD22)
- CSA Certification

Orifice 10/13/20 in brass and stainless steel is also available in explosion proof version
Explosion proof approvals (NA10+PX58):
- ATEX:
  - EPS 18 ATEX 1 232 X
  - II 2G Ex mb IIC T4 Gb
  - II 2D Ex mb IIIC T130°C Db
- IECEx:
  - IECEx EPS 18.0110X
  - Ex mb IIC T4 Gb
  - Ex mb IIIC T130°C Db

DTS 1000115690 EN Version: Z Status: RL (released | freigegeben | validé) printed: 13.12.2021

6.4. Ordering chart accessories

Cable plug Type 2518, form A acc. to DIN EN 175301-803

Note:
For other versions see data sheet **Type 2518** ▶.

Cable plug	Dimensions	Version	Voltage	Article no.
	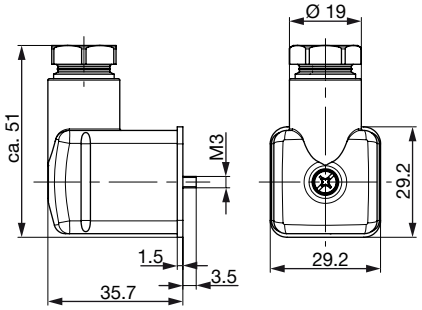	Without circuitry (AC/DC)	0…250 V AC/DC	314802
		With LED (AC/DC)	12…24 V AC/DC	314812
		With LED and varistor (AC/DC)	12…24 V AC/DC	314820
		With rectifier, LED and varistor	12…24 V AC/DC	314816

Cable plug Type 2513, form A acc. to DIN EN 175301-803

Note:
- The Cable plug Type 2513 meets the requirements of ATEX category 3 GD.
- For more information on the cable plug, see data sheet **Type 2513** ▶.

Cable plug	circuit diagram	Cable length [mm]	Article no.
	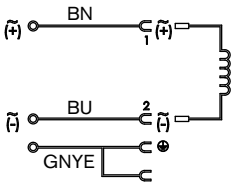	12000	260893
		5000	260892
		3000	260891
		300	260890

Timer Type 1087, form A acc. to DIN EN 175301-803

Note:
For more information on the timer, see data sheet **Type 1087** ▶.

Timer	Approval	Product code	Voltage range	Article no.
Analogue version 	–	1087-A-BCH-UC-28	10…30 V AC/DC	348828
	–	1087-A-BDK-UC-28	24…240 V AC/DC	348829
	cURus	1087-A-BCH-UC-28*PU01	10…30 V AC/DC	348906
	cURus	1087-A-BDK-UC-28*PU01	24…240 V AC/DC	348907
Digital version 	–	1087-A-BFW-UC-29	10…48 V AC/DC	348830
	–	1087-A-BDX-UC-29	110…240 V AC/DC	348831
	cURus	1087-A-BFW-UC-29*PU01	10…48 V AC/DC	348908
	cURus	1087-A-BDX-UC-29*PU01	110…240 V AC/DC	348909

DTS 1000115690 EN Version: Z Status: RL (released | freigegeben | validé) printed: 13.12.2021

Bürkert – Close to You

For up-to-date addresses
please visit us at
www.burkert.com



DTS 1000115690 EN Version: Z Status: RL (released | freigegeben | validé) printed: 13.12.2021

Credits, © and concept: Christian Bürkert GmbH & Co. KG | Photographs: Marc Eggimann Fotografie - 4051 Basel | Scanner GmbH - Werbeagentur Künzelsau - 74653 Künzelsau