PRODUCT DETAILS

ARTICLE: 28709

WHEEL FS 125X35/50 PB SWIVEL FORK M22



Wheel series FS

High temperatures wheels (270°C / 518°F) in a thermoplastic compound with plain bore. For manual applications. Excellent shock resistance with minimal rolling resistance. Load rating according to EN12527 & EN12532, without obstacles. When present, do not apply brake at temperatures > 40°C (104°F).
Plain bore wheel.

Castor series M22

M22 series, Medium-light pressed steel fork assemblies; swivel version has double ball raceways. Zincplated.

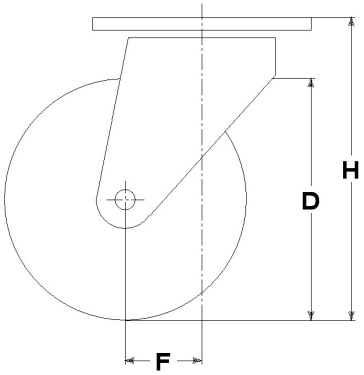

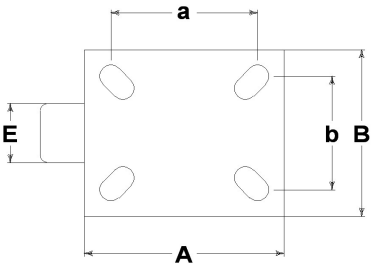

Technical data

Wheel diameter	D	125 mm
Tyre width	E	35,0 mm
Bore diameter	d	20 mm
Weight article		1,050 kg
Hub width	L	50 mm
Overall height	H	159 mm
Top plate outer dimensions	AxB	102x83 mm
Bolt hole spacing	axb	80x60 mm
Fixing bolt diameter	g	M8
Offset	F	49 mm
Fork width	U	50 mm
Load Capacity		200 kg

Related Articles

Spare part wheel: 28010
Version with trailing brake: 28709FR
Version with footguard: 28709PP
Version with trailing brake and footguard: 28709FRPP

GENERAL INFORMATION / RECOMMENDATIONS AND WARNINGS
The cited text and the complete catalogue in their most up-dated versions are available in the OEM's website page www.lagspa.it/downloads. The dimensions, descriptions, specifications and illustrations herein are indicative and subject to variations without notice. The fact that products are illustrated herein does not necessarily imply they are available from stock nor does it place us under any obligation to supply them.
Tests carried out refer to the original products with original accessories: the replacement of one of the components with others of different manufacture might prevent the same results from being achieved and will automatically invalidate any guarantee. Please contact our technical service concerning any special application.