DIVERTER BLOCK





- Ideal for branching off primary series air prep manifold to add additional products, such as adding another regulator or dividing lubricated and un-lubricated compressed air lines
- Pad mount interface ports on top of product for adding pressure switches
- 1/4 ports (Series 651), 3/8 ports (Series 652), or 1/2 ports (Series 653) on the front and back provide additional flexibility to attach or branch off the main manifold. It can also be used to feed auxiliary air to air prep assemblies that require additional air capacity, such as a bank of manifold regulators

Performance Data				
Series		**651**	**652**	**653**
Port sizes	Left, Right & Bottom	1/4 & Flanged	1/2 & Flanged	1 & Flanged
	Front & Back	1/4	3/8	1/2
Thread type		G (NPTF in option)		
Top Port (for Pressure Switch/Pressure Sensor)		pad mount		
Maximum pressure (bar)		16		20
Fluid		air or inert gas		
Weight (kg)		0.188	0.331	0.753

Materials in contact with fluid	
Body	Aluminium

How to Order - Diverter Block

G 651 A D 0 0 2 C A00 0 0

Configurator - CAD Files

Thread connection
G = ISO 228/1-G (1)
8 = NPTF

Product series
651
652
653

Revision letter
A

Product type
D = Diverter Block

Pressure switch type
0 = No pressure switch
1 = Pad mount without Visual indicator 10 bar max.
2 = Pad mount with Visual indicator 10 bar max.

Options (2)
A00 = No option
101 = Side Mounting Brackets
117 = ATEX zones 1-21
124 = CUTR Certification (EAC)
125 = CUTR Ex

Pressure switch interface
C = Provisioned for 349 pressure switch pad mount

Port size
2 = 1/4 (Series 651)
4 = 1/2 (Series 652)
6 = 1 (Series 653)

(1) Conforms to ISO standards 1179-1.
(2) If multiple options are required, please use the on-line CAD configurator on the website to generate the part number (www.emerson.com).

01810GB-2020/R01
Availability, design and specifications are subject to change without notice. All rights reserved.

Dimensions : mm - Series 651/652/653 Diverter Block

Configurator - CAD Files

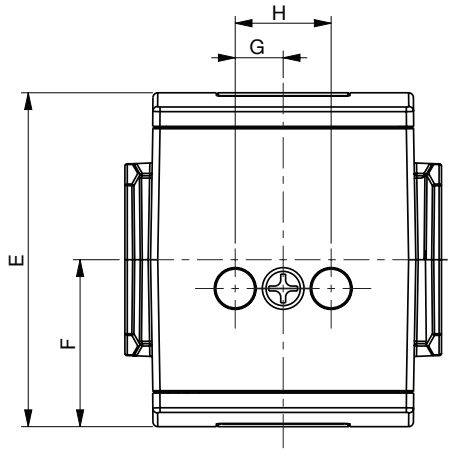

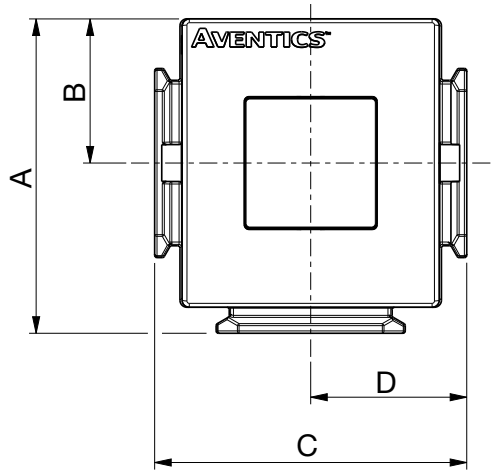

Cross Section - Series 651/652/653 Diverter Block

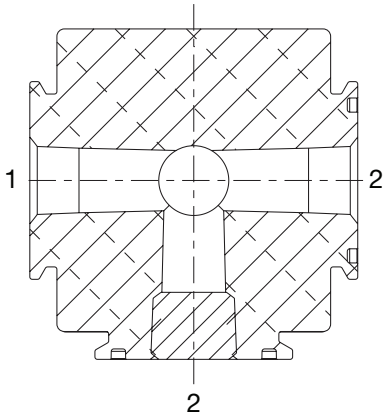

	A	B	C	D	E	F	G	H
651	54.4	25	50	25	58	29	10	20
652	66.5	30.5	66	33	70	35	10	20
653	86.5	41	90	45	93	46.5	10	20

01810GB-2020/R01
Availability, design and specifications are subject to change without notice. All rights reserved.