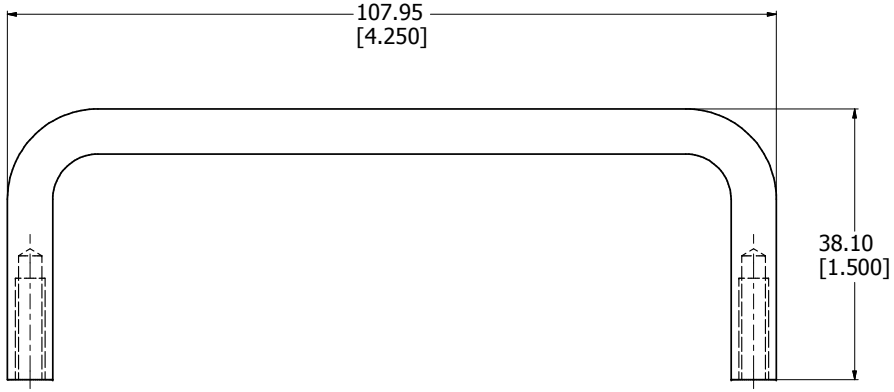

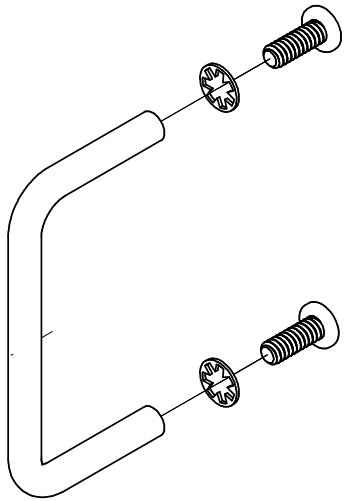

TYPICAL HANDLE ASSEMBLY

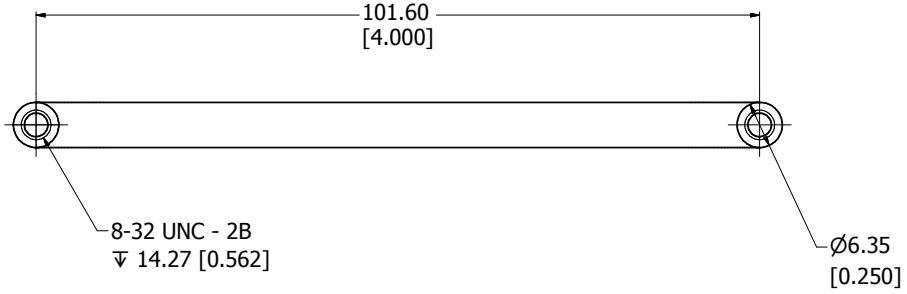

1427S
Handle Material - CR Steel
Finish - Bright Crome Plated
Hardware
2 Screws - Panhead 8-32 x 1/2"
2 Internal Tooth Lockwashers
**note handle sold singly

HAMMOND MANUFACTURING™

1427S