EVF543

Ethernet connection cable

VSTAN040VAS00,5P04STAN040VAS

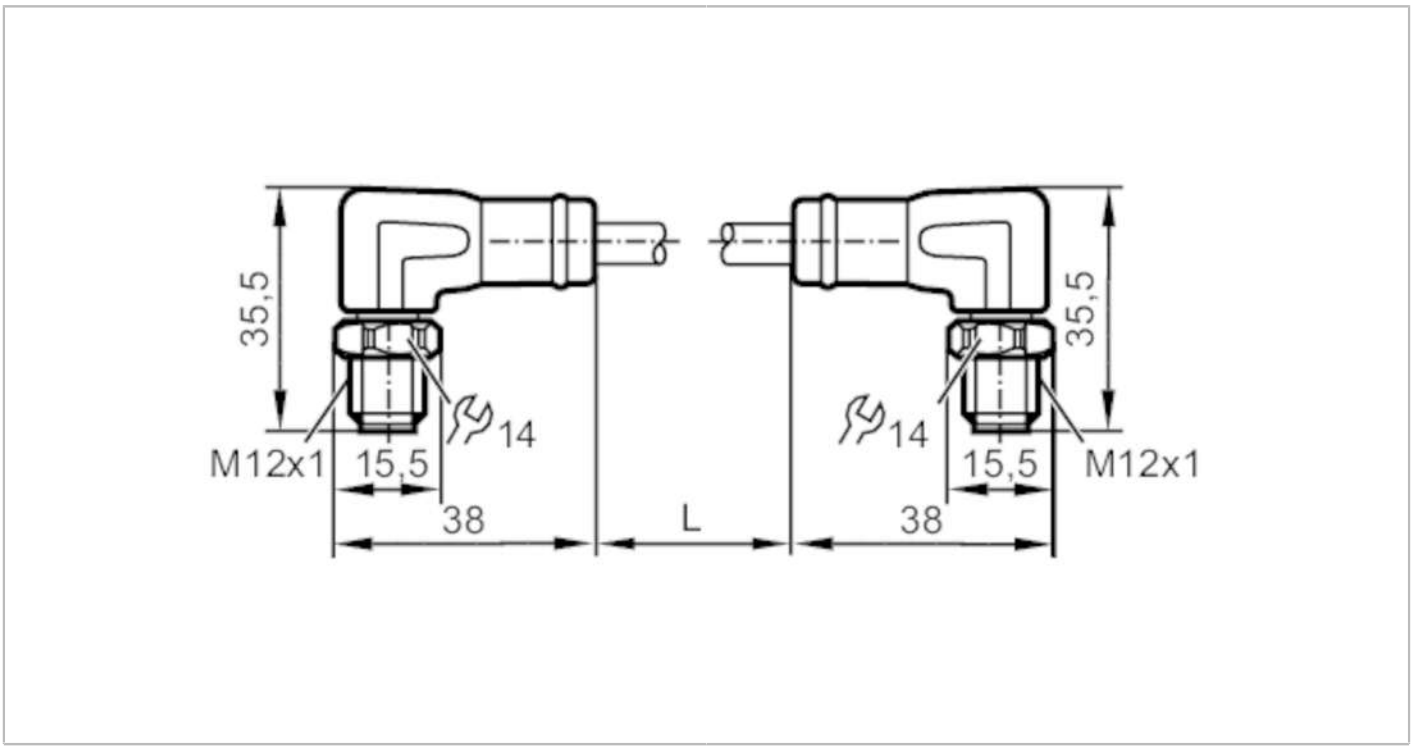

Application		
Special feature		Free from silicone; Halogen-free; Gold-plated contacts; Screened cable; Drag chain suitability
Design		Ethernet cable, D-coded
Application		Industrial Ethernet; CAT5/CAT5e; 100 Mbit/s; hygienic and wet areas in the food industry
Free from silicone		yes
Electrical data		
Operating voltage	[V]	30 AC / 60 DC
Protection class		III
Max. current load total	[A]	4
Operating conditions		
Ambient temperature	[°C]	-25...100
Ambient temperature (moving)	[°C]	0...80
Protection		IP 65; IP 67; IP 68; IP 69K
Mechanical data		
Weight	[g]	68.1
Dimensions	[mm]	35.5 x 15.5 x 38
Materials		PP Halogen-free
Moulded-body material		PP
Material nut		stainless steel (1.4404 / 316L)
Drag chain suitability		yes

EVF543

Ethernet connection cable

VSTAN040VAS00,5P04STAN040VAS

Drag chain suitability	bending radius for flexible use	min. 15 x cable diameter
	travel speed	max. 3.3 m/s for a horizontal travel length of 5 m and max. acceleration of 5 m/s²
	bending cycles	> 1 Mio.
	torsional strain	± 180 °/m

Remarks

Pack quantity	1 pcs.

Electrical connection

Cable: 0.5 m, MPPE, Halogen-free, grey, Ø 6.5 mm, shielded; PROFINET Type C; 4 x 0.34 mm² (7 x Ø 0.25 mm)

Electrical connection - plug

Connector: 2 x M12, angled; coding: D; Moulded body: PP; Locking: stainless steel (1.4404 / 316L); Contacts: gold-plated; Tightening torque: 0.6...1.2 Nm; Shielded connection cable: screen connected



Connection

