22214 E

SKF Explorer

Dimensions

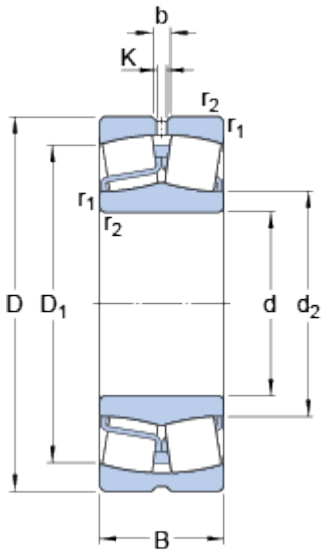

d		70	mm
D		125	mm
B		31	mm
d_2	≈	83	mm
D_1	≈	111	mm
b		6	mm
K		3	mm
$r_{1,2}$	min.	1.5	mm

Abutment dimensions

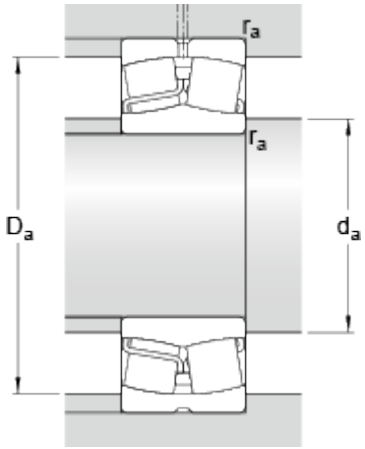

d_a	min.	79	mm
D_a	max.	116	mm
r_a	max.	1.5	mm

Calculation data

Basic dynamic load rating	C	213	kN
Basic static load rating	C_0	228	kN
Fatigue load limit	P_u	25.5	kN
Reference speed		5000	r/min
Limiting speed		6700	r/min
Calculation factor	e	0.23	
Calculation factor	Y_1	2.9	
Calculation factor	Y_2	4.4	
Calculation factor	Y_0	2.8	

Mass

Mass	1.55	kg