DATASHEET - PN2-200



Similar to illustration

Switch-disconnector 3p, 200A

Part no. PN2-200
Catalog No. 266006

Delivery program

Product range			Switch-disconnectors
Protective function			Disconnectors/main switches
Standard/Approval			IEC
Installation type			Fixed
Construction size			PN2
Description			Main switch characteristics including positive drive to IEC/EN 60204 and VDE 0113. Isolating characteristics to IEC/EN 60947-3 and VDE 0660. Busbar tag shroud to VDE 0160 Part 100.
Number of poles			3 pole
Standard equipment			Screw connection
Switch positions			I, 0
Rated current = rated uninterrupted current	$I_n = I_u$	A	200
Short-circuit protection max. fuse gL-characteristic		A gL	250

Technical data

General

Standards			IEC/EN 60947
Protection against direct contact			Finger and back-of-hand proof to DIN EN 50274/VDE 0106 part 110
Climatic proofing			Damp heat, constant, to IEC 60068-2-78 Damp heat, cyclic, to IEC 60068-2-30
Ambient temperature			
Ambient temperature, storage		°C	- 40 - + 70
Operation		°C	-25 - +70
Mechanical shock resistance (10 ms half-sinusoidal shock) according to IEC 60068-2-27		g	20 (half-sinusoidal shock 20 ms)
Safe isolation to EN 61140			
Between auxiliary contacts and main contacts		V AC	500
between the auxiliary contacts		V AC	300
Mounting position			
Mounting position			Vertical and 90° in all directions 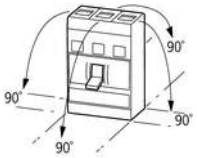 With residual-current release XFI: - NZM1, N1, NZM2, N2: vertical and 90° in all directions with plug-in adapter elements - NZM1, N1, NZM2, N2: vertical, 90° right/left with withdrawable unit: - NZM3, N3: vertical, 90 ° left - NZM4, N4: vertical with remote operator: - NZM2, N(S)2, NZM3, N(S)3, NZM4, N(S)4: vertical and 90° in all directions
Direction of incoming supply			as required
Degree of protection			
Device			In the area of the HMI devices: IP20 (basic protection type)
Enclosures			With insulating surround: IP40 With door coupling rotary handle: IP66
Terminations			Tunnel terminal: IP10 Phase isolator and band terminal: IP00

Switch-disconnectors

Rated surge voltage invariability	U_{imp}		

Main contacts		V	8000
Auxiliary contacts		V	6000
Rated operational voltage	Ue	V AC	690
Rated operating frequency	f	Hz	50/60
Rated current = rated uninterrupted current	$I_n = I_u$	A	200
Overvoltage category/pollution degree			III/3
Rated insulation voltage	U_i	V	690
Use in unearthed supply systems		V	≦ 690
Other technical data (sheet catalogue)			Weight Temperature dependency, Derating Effective power loss

Rated short-circuit making capacity

690 V 50/60 H	Ic	kA	5.5

Rated short-time withstand current

t = 0.3 s	I_{cw}	kA	3.5
t = 1 s	I_{cw}	kA	3.5
			The rated short-time withstand current for PN2/N2 in conjunction with earth-fault release NZM2-4-XFI...Icw = 1.5 kA

Rated conditional short-circuit current

With back-up fuse		A gG/gL	PN2(N2)-160…250: 250
400 … 415 V		kA	100
690 V		kA	80
With downstream fuse		A gG/gL	PN2(N2)-160…250: 250
400 … 415 V		kA	100
690 V		kA	80

Rated making and breaking capacity

Rated operational current	I_e	A	
AC-22/23A			
415 V	I_e	A	250
690 V	I_e	A	250
Lifespan, mechanical	Operations		20000
Max. operating frequency		Ops/h	120

Lifespan, electrical

AC-1			
400 V 50/60 Hz	Operations		10000
415 V 50/60 Hz	Operations		10000
690 V 50/60 Hz	Operations		7500
AC-3			
400 V 50/60 Hz	Operations		7500
415 V 50/60 Hz	Operations		7500
690 V 50/60 Hz	Operations		5000

Terminal capacity

Standard equipment			Screw connection
Optional accessories			Box terminal Tunnel terminal connection on rear
Copper conductors and cables			
Box terminal			
Solid		mm^2	1 x (10 - 16) 2 x (6 - 16)
Stranded		mm^2	1 x (25 - 185) 2 x (25 - 70)
Tunnel terminal			
Solid		mm^2	1 x 16
Stranded			
1-hole		mm^2	1 x (25 - 185)
Bolt terminal and rear-side connection			
Direct on the switch			
Solid		mm^2	1 x (10 - 16)

			2 x (6 - 16)
Stranded		mm^2	1 x (25 - 185) 2 x (25 - 70)
Al conductors, Al cable			
Tunnel terminal			
Solid		mm^2	1 x 16
Stranded			
1-hole		mm^2	1 x (25 - 185)
Bolt terminal and rear-side connection			
Direct on the switch			
Solid		mm^2	1 x (10 - 16) 2 x (10 - 16)
Stranded		mm^2	1 x (25 - 185) 2 x (25 - 70)
Cu strip (number of segments x width x segment thickness)			
Box terminal			
	min.	mm	2 x 9 x 0.8
	max.	mm	10 x 16 x 0.8 (2x) 8 x 15.5 x 0.8
Bolt terminal and rear-side connection			
Flat copper strip, with holes	min.	mm	2 x 16 x 0.8
Flat copper strip, with holes	max.	mm	10 x 24 x 0.8
Copper busbar (width x thickness)	mm		
Bolt terminal and rear-side connection			
Screw connection			M8
Direct on the switch			
	min.	mm	16 x 5
	max.	mm	24 x 8

Design verification as per IEC/EN 61439

Technical data for design verification			
Rated operational current for specified heat dissipation	I_n	A	200
Equipment heat dissipation, current-dependent	P_{vid}	W	30.72
Operating ambient temperature min.		°C	-25
Operating ambient temperature max.		°C	70
IEC/EN 61439 design verification			
10.2 Strength of materials and parts			
10.2.2 Corrosion resistance			Meets the product standard's requirements.
10.2.3.1 Verification of thermal stability of enclosures			Meets the product standard's requirements.
10.2.3.2 Verification of resistance of insulating materials to normal heat			Meets the product standard's requirements.
10.2.3.3 Verification of resistance of insulating materials to abnormal heat and fire due to internal electric effects			Meets the product standard's requirements.
10.2.4 Resistance to ultra-violet (UV) radiation			Meets the product standard's requirements.
10.2.5 Lifting			Does not apply, since the entire switchgear needs to be evaluated.
10.2.6 Mechanical impact			Does not apply, since the entire switchgear needs to be evaluated.
10.2.7 Inscriptions			Meets the product standard's requirements.
10.3 Degree of protection of ASSEMBLIES			Does not apply, since the entire switchgear needs to be evaluated.
10.4 Clearances and creepage distances			Meets the product standard's requirements.
10.5 Protection against electric shock			Does not apply, since the entire switchgear needs to be evaluated.
10.6 Incorporation of switching devices and components			Does not apply, since the entire switchgear needs to be evaluated.
10.7 Internal electrical circuits and connections			Is the panel builder's responsibility.
10.8 Connections for external conductors			Is the panel builder's responsibility.
10.9 Insulation properties			
10.9.2 Power-frequency electric strength			Is the panel builder's responsibility.
10.9.3 Impulse withstand voltage			Is the panel builder's responsibility.
10.9.4 Testing of enclosures made of insulating material			Is the panel builder's responsibility.

10.10 Temperature rise			The panel builder is responsible for the temperature rise calculation. Eaton will provide heat dissipation data for the devices.
10.11 Short-circuit rating			Is the panel builder's responsibility. The specifications for the switchgear must be observed.
10.12 Electromagnetic compatibility			Is the panel builder's responsibility. The specifications for the switchgear must be observed.
10.13 Mechanical function			The device meets the requirements, provided the information in the instruction leaflet (IL) is observed.

Technical data ETIM 7.0

Low-voltage industrial components (EG000017) / Switch disconnector (EC000216)

Electric engineering, automation, process control engineering / Low-voltage switch technology / Off-load switch, circuit breaker, control switch / Switch disconnector (ecl@ss10.0.1-27-37-14-03 [AKF060013])

Version as main switch			Yes
Version as maintenance-/service switch			Yes
Version as safety switch			No
Version as emergency stop installation			Yes
Version as reversing switch			No
Number of switches			1
Max. rated operation voltage Ue AC		V	690
Rated operating voltage		V	690 - 690
Rated permanent current Iu		A	200
Rated permanent current at AC-23, 400 V		A	0
Rated permanent current at AC-21, 400 V		A	0
Rated operation power at AC-3, 400 V		kW	0
Rated short-time withstand current Icw		kA	3.5
Rated operation power at AC-23, 400 V		kW	110
Switching power at 400 V		kW	0
Conditioned rated short-circuit current Iq		kA	0
Number of poles			3
Number of auxiliary contacts as normally closed contact			0
Number of auxiliary contacts as normally open contact			0
Number of auxiliary contacts as change-over contact			0
Motor drive optional			No
Motor drive integrated			No
Voltage release optional			No
Device construction			Built-in device fixed built-in technique
Suitable for ground mounting			Yes
Suitable for front mounting 4-hole			No
Suitable for front mounting centre			No
Suitable for distribution board installation			Yes
Suitable for intermediate mounting			Yes
Colour control element			Black
Type of control element			Rocker lever
Interlockable			Yes
Type of electrical connection of main circuit			Screw connection
Degree of protection (IP), front side			IP20
Degree of protection (NEMA)			

Dimensions

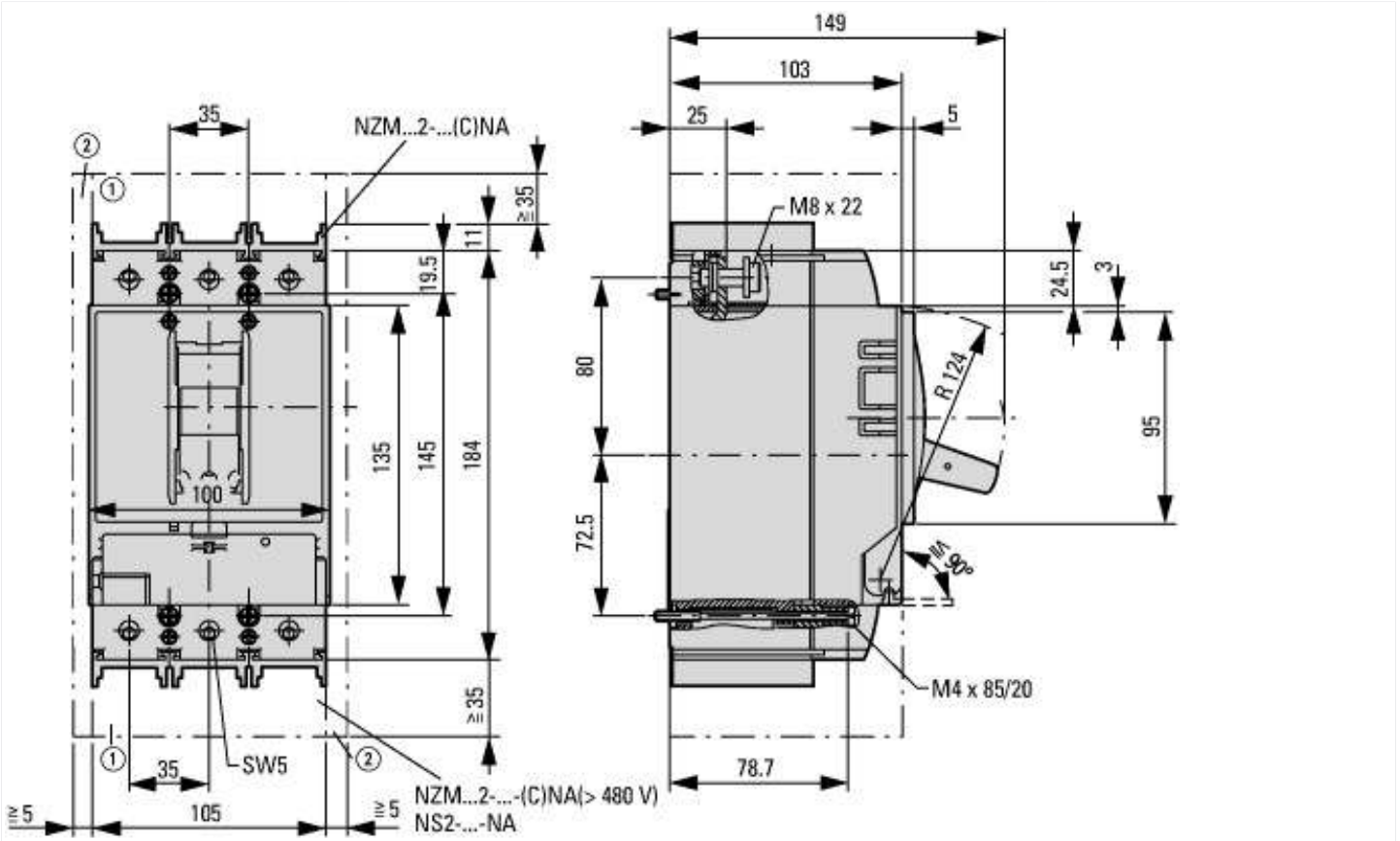

① Blow out area, minimum clearance to adjacent parts
② Minimum clearance to adjacent parts

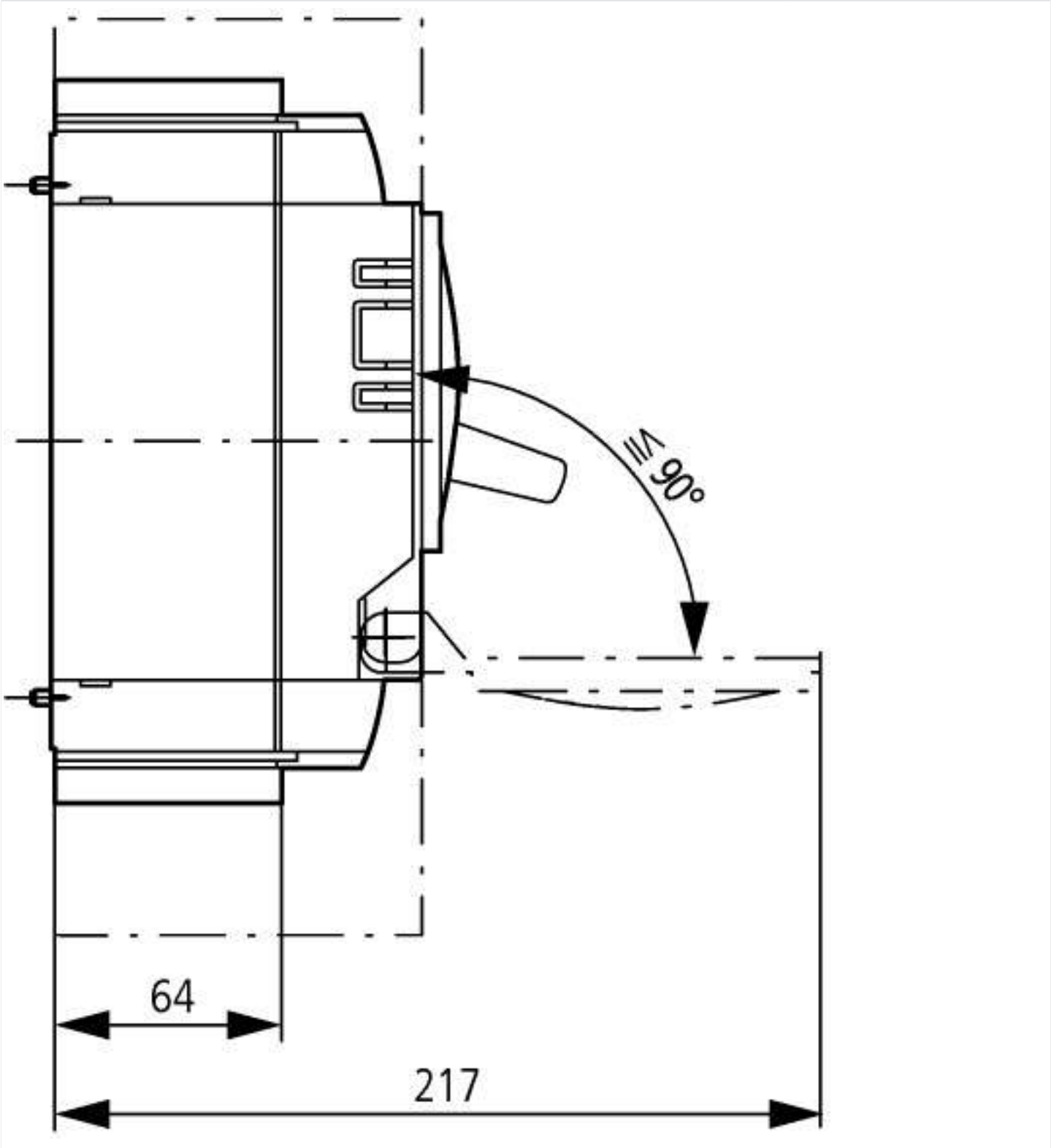

© 08/2021 by Eaton Industries GmbH