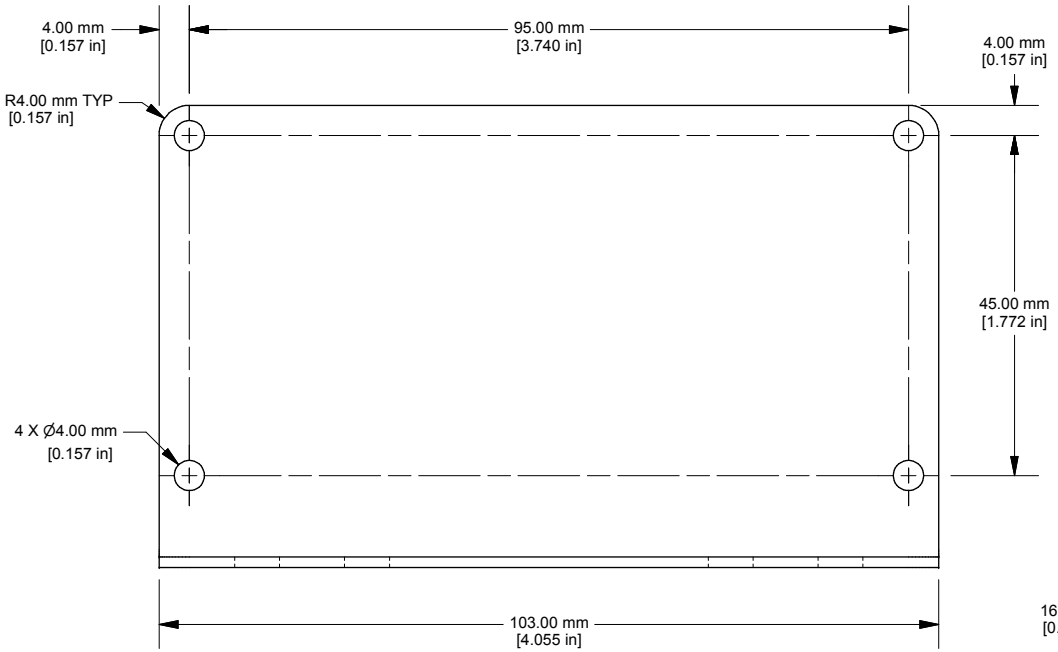

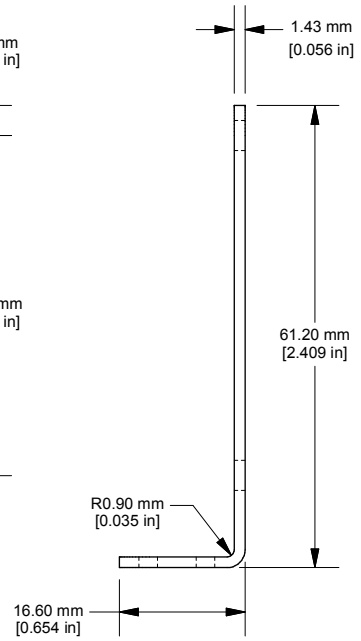

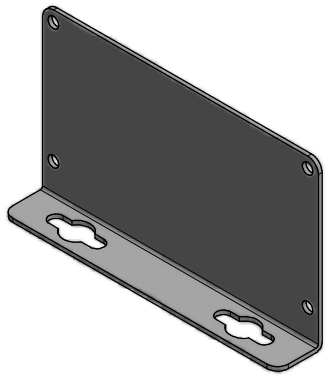

FLANGE

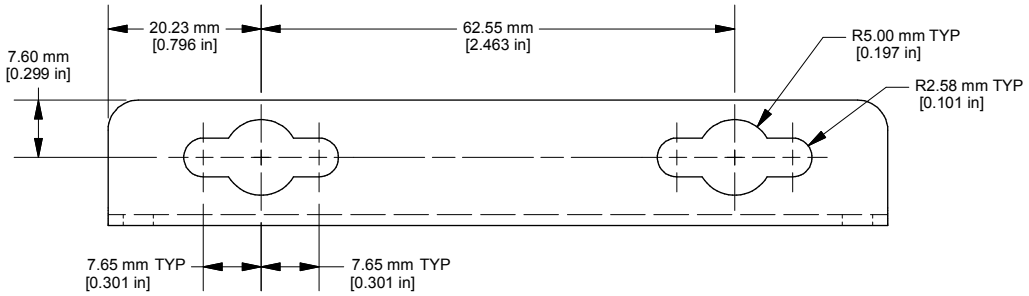

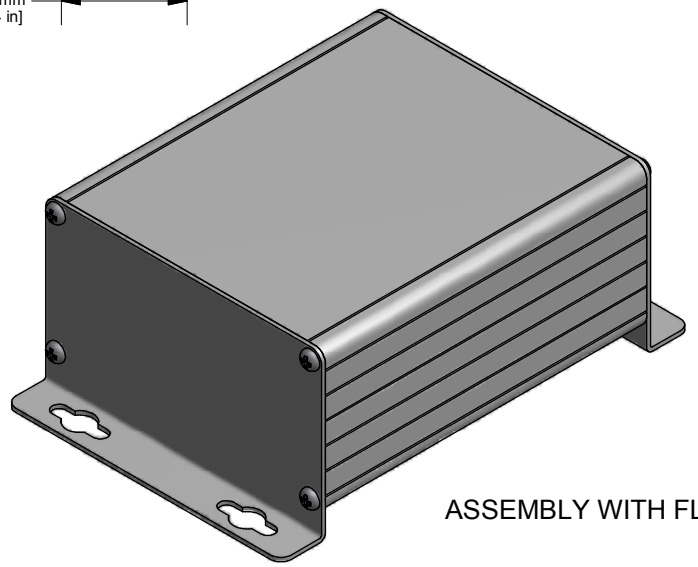

ASSEMBLY WITH FLANGES

HAMMOND MANUFACTURING™

1455NF

www.hammondmfg.com