EY5011

Muting arm set

4P-RETRO-REFLECTIVE-SENSORS

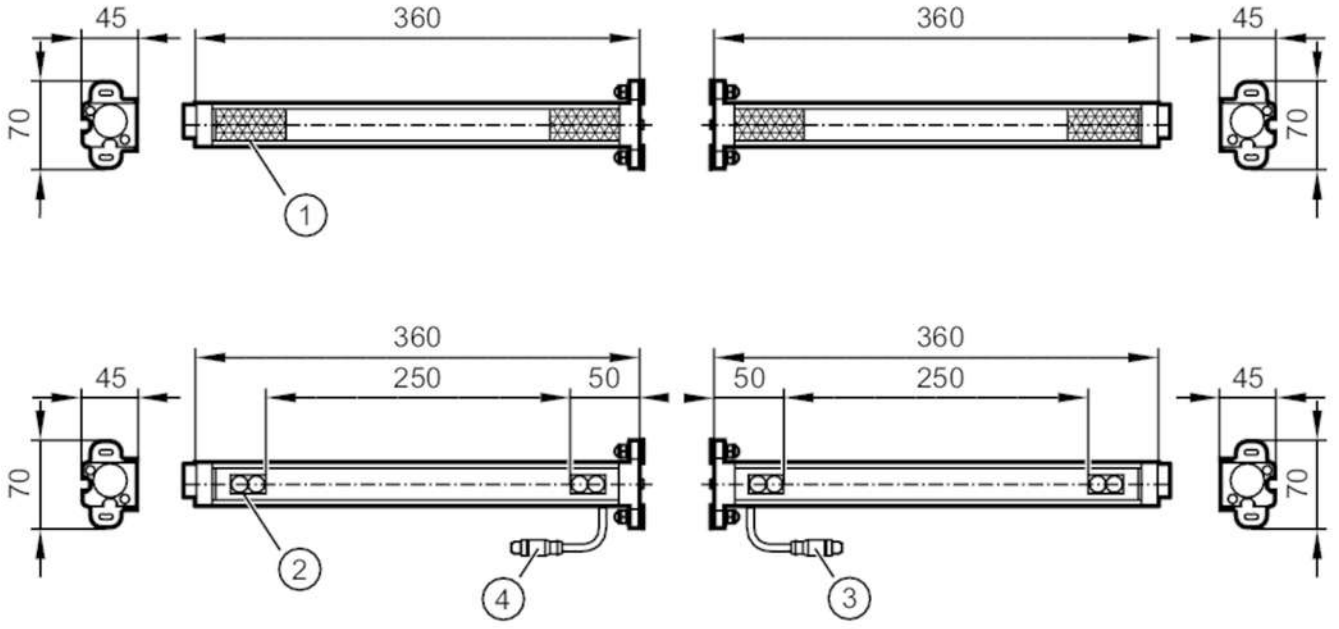

1 Reflector
2 Transmitter / receiver
3 plug blue
4 plug red

CE

Product characteristics		
Type of light		infrared light
Application		
Design		sequential muting with four parallel retro-reflective sensors
Function principle		Retro-reflective sensor
Electrical data		
Operating voltage	[V]	19.2...28.8 DC
Current consumption	[mA]	60
Protection class		III
Reverse polarity protection		yes
Type of light		infrared light
Wave length	[nm]	940
Outputs		
Electrical design		PNP
Output function		dark-on mode
Max. voltage drop switching output DC	[V]	0.5
Permanent current rating of switching output DC	[mA]	100
Short-circuit protection		yes
Overload protection		yes

EY5011

Muting arm set

4P-RETRO-REFLECTIVE-SENSORS

Detection zone		
Range	[m]	< 2.5
Operating conditions		
Ambient temperature	[°C]	-30...55
Protection		IP 65
Tests / approvals		
EMC		EN 60947-5-2
Mechanical data		
Weight	[g]	3530
Materials		aluminium; polypropylene
Lens material		polycarbonate-ABS
Remarks		
Pack quantity		4 pcs.

Electrical connection - transmitter 1

Connector: 1 x M12; coding: A; Moulded body: blue

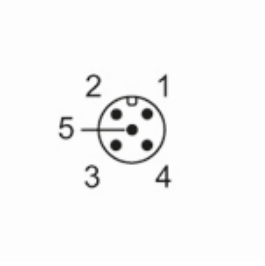

Connection

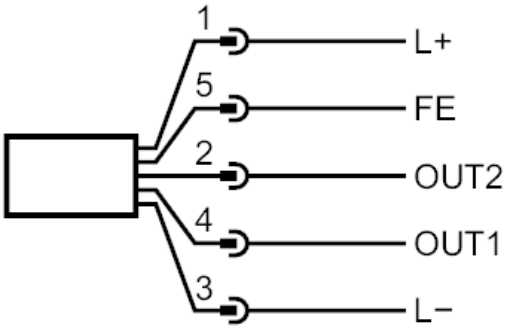

4 OUT 1	switching output
2 OUT 2	switching output

EY5011

Muting arm set

4P-RETRO-REFLECTIVE-SENSORS

Electrical connection - transmitter 2

Connector: 1 x M12; coding: A; Moulded body: red

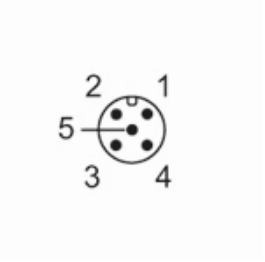

Connection

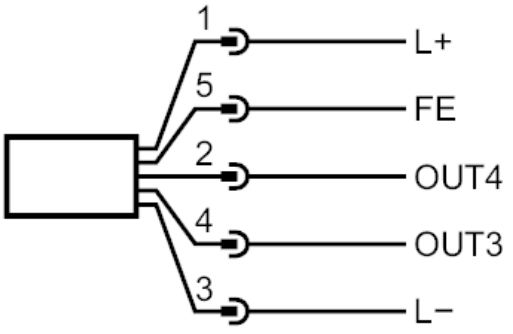

4 OUT 3	switching output
2 OUT 4	switching output