SMF521

Magnetic-inductive flow meter

SMG65KGFFRKG/USD

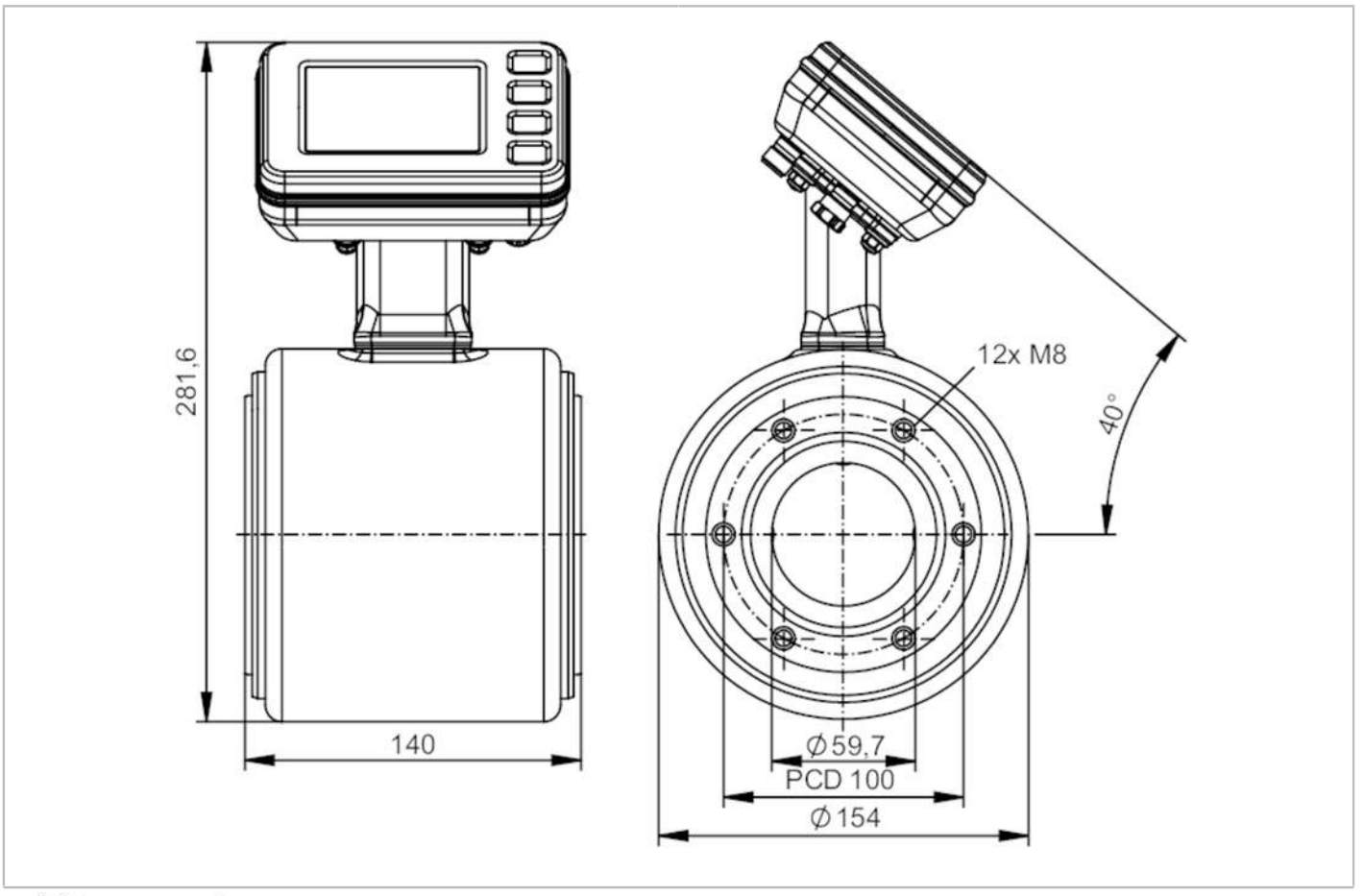

Product characteristics				
Measuring range	20...2000 l/min	1200...120000 l/h	5.5...528.5 gpm	0.32...32.96 ft/s
Nominal diameter	DN65 (2 1/2“)			
Process connection	ifm-specific device flange			
Application				
Special feature	Gold-plated contacts			
Application	food and beverage industry			
Media	conductive liquids; water; hydrous media			
Note on media	food products such as beer, milk, fruit juices, soft drinks, ketchup, yoghurt, yoghurt toppings, ice cream			
	conductivity: ≥ 5 µS/cm			
Medium temperature	-20...150 °C		-4...302 °F	
Min. bursting pressure	543.75 psi		3.75 MPa	
Pressure rating	362.5 psi		2.5 MPa	
Electrical data				
Operating voltage [V]	18...32 DC			
Current consumption [mA]	250; (24V)			
Protection class	III			
Reverse polarity protection	yes			
Power-on delay time [s]	< 5			

SMF521

Magnetic-inductive flow meter

SMG65KGFFRKG/USD

Measuring principle	magnetic-inductive			
Inputs / outputs				
Total number of inputs and outputs	2			
Inputs				
Inputs	OUT2	external totaliser reset		
Outputs				
Total number of outputs	2			
Output signal	OUT1	pulse signal; totaliser switching signal; diagnostic signal; IO-Link		
	OUT2	analogue signal; pulse signal; totaliser switching signal; diagnostic signal		
Electrical design	PNP/NPN			
Pulse output	flow rate meter			
Short-circuit protection	yes			
Type of short-circuit protection	pulsed			
Overload protection	yes			
Analogue				
Number of analogue outputs	1			
Analogue current output [mA]	4...20; (skalierbar)			
Max. load [Ω]	500			
Resolution of analogue output	0.38 µA			
Digital				
Number of digital outputs	2			
Max. voltage drop switching output DC [V]	2			
Permanent current rating of switching output DC [mA]	100			
Switching frequency DC [Hz]	0...10000			
Measuring/setting range				
Measuring range	20...2000 l/min	1200...120000 l/h	5.5...528.5 gpm	0.32...32.96 ft/s
Display range	-2400...2400 l/min	-144000...144000 l/h	-634.01...634.01 gpm	-39.4...39.4 ft/s
Resolution	0.1 l/min	100 l/h	0.01 gpm	0.01 ft/s
Note on factory setting	0…130 gpm			
Analogue start point ASP	-2000...1600 l/min	-120000...96000 l/h	-528.4...422.72 gpm	-32.8...26.24 ft/s
Analogue end point AEP	-1600...2000 l/min	-96000...120000 l/h	-422.72...528.4 gpm	-26.24...32.8 ft/s
Low flow cut-off LFC	0...1600 l/min	0...96000 l/h	0...422.72 gpm	0...26.24 ft/s
Pulse length [s]	0.00005...2			
Pulse value	0.004...99990000 l			
Temperature monitoring				
Measuring range	-20...150 °C		-4...302 °F	
Display range	-20...150 °C		-4...302 °F	
Resolution	0.01 °C		0.1 °F	
Analogue start point	-20...116 °C		-4...240.8 °F	
Analogue end point	14...150 °C		57.2...302 °F	

SMF521

Magnetic-inductive flow meter

SMG65KGFFRKG/USD

Conductivity monitoring			
Measuring range	[µS/cm]	100...100000	
Display range	[µS/cm]	0...10000000	
Resolution	[µS/cm]	1	
Analogue start point	[µS/cm]	0...80000	
Analogue end point	[µS/cm]	20000...100000	
Accuracy / deviations			
Volumetric flow monitoring			
Accuracy (under reference conditions)		with optional factory calibration (availability is being planned)	± (0,2 % MW + 2 mm/s)
		standard	± (0,5 % MW + 1,5 mm/s)
Repeatability		0,1% MW	
Temperature monitoring			
Accuracy	[K]	± 1	
Repeatability	[K]	± 0,5	
Conductivity monitoring			
Accuracy (in the measuring range)		in the range of 100...20000 µS/cm	±10% MW
		in the range of 20000...100000 µS/cm	±20% MW
Repeatability		± 5% MW	
Response times			
Volumetric flow monitoring			
Response time	[s]	< 0.3	
Damping process value dAP	[s]	0...5	
Temperature monitoring			
Response time	[s]	< 3; (flow velocity: ≥ 0,5m/s)	
Conductivity monitoring			
Response time	[s]	< 2	
Software / programming			
Diagnostic functions		direction of flow detection; liquid detection	
Interfaces			
Communication interface		IO-Link	
Transmission type		COM3 (230,4 kBaud)	
IO-Link revision		1.1.3	
SDCI standard		IEC 61131-9	
Profiles		Common - I&D	Identification and Diagnosis
		Smart Sensor - SSP 4.3.4	Measuring and Switching Sensor, floating point, 4 channel
SIO mode		yes	
Required master port type		A	
Process data analogue		6	
Process data binary		8	
Min. process cycle time	[ms]	1.9	

SMF521

Magnetic-inductive flow meter

SMG65KGFFRKG/USD

IO-Link process data (cyclical)	**function**	**bit length**	
	totaliser	32	
	flow	32	
	temperature	32	
	conductivity	32	
	status	4	
	binary switching information	8	
IO-Link functions (acyclical)	direction of flow detection; totaliser; memory; operating hours counter; internal temperature; simulation function		
Operating conditions			
Ambient temperature	-20...65 °C	-4...149 °F	
Storage temperature	-20...80 °C	-4...176 °F	
Protection	IP 67; IP 69		
Tests / approvals			
EMC	DIN 61326-1		
Shock resistance	DIN IEC 68-2-27	20 g (18ms)	
Vibration resistance	DIN IEC 68-2-6	5 g (10...2000Hz)	
MTTF [years]	81		
UL approval	UL approval no.	I031	
Pressure Equipment Directive	Sound engineering practice; can be used for group 2 fluids; group 1 fluids on request		
Mechanical data			
Weight [g]	6897		
Inlet pipe length	5 x DN		
Outlet pipe length	2 x DN		
Materials	housing: stainless steel (316L/1.4404); flange: stainless steel (304/1.4301); electronics fixture: stainless steel (304/1.4301); electronics: stainless steel (316L/1.4404); Display: polysulfone; Display-Sealing: FKM; LED ring: PP		
Materials (wetted parts)	Pipe section: PFA; electrodes: stainless steel (316L/1.4435)		
Nominal diameter	DN65 (2 1/2“)		
Process connection	ifm-specific device flange		
Surface characteristics Ra/Rz of the wetted parts	≤ 0.4 µm		
Displays / operating elements			
Display	process value	full graphics TFT display, multi-colour 3,5" 320 x 240 Pixel	
		display layouts: 4	
		display rotation: 4 x 90°	
	operating status	LED ring, three-colour	
Display unit	l/min; l/h; hl/min; hl/h; m³/min; m³/h; m/s; gpm; gph; ft/s; °C; °F; µS/cm; S/m; ms/cm		
Factory setting	gpm; °F; µS/cm		
Language	German; English; Spanish; French; Italian; Japanese; Korean; Portuguese; Chinese		
Operating elements	4	capacitive pushbuttons	

SMF521

Magnetic-inductive flow meter

SMG65KGFFRKG/USD

Remarks

Remarks	MW = measured value
	MEW = Final value of the measuring range
	pulse and totaliser signal are only available for one of the two outputs
	reference conditions (1/2): water (free of gas bubbles), 15...35 °C, process connection: DIN32676 series A, pipe standard suitable for process connection
	reference conditions (2/2): inlet pipe length 10xDN, outlet pipe length 5xDN, device settling time: 30 minutes, device orientation: horizontal, display orientation: up
Pack quantity	1 pcs.

Electrical connection

Connector: 1 x M12; coding: A; Contacts: gold-plated



Connection

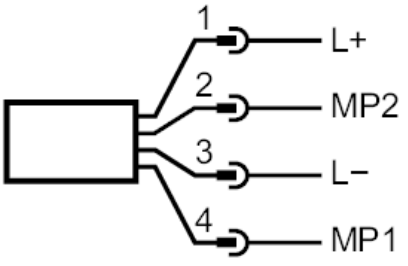

Electrical connection - plug

1	L+	
2	OUT2	MP2, DO, AO, reset
3	L-	
4	OUT1	MP1, DO, IO-Link

AO: analogue output; DO: digital output; MP: multi-function connection