PR electronics



5531

Loop powered LCD indicator

No. 5531V105-UK
From ser. no.:
121288001-108 & >121350001

DK ▶ PR electronics A/S tilbyder et bredt program af analoge og digitale signalbehandlingsmoduler til industriel automation. Programmet består af Isolatorer, Displays, Ex-barrierer, Temperaturtransmittere, Universaltransmittere mfl. Vi har modulerne, du kan stole på i selv barske miljøer med elektrisk støj, vibrationer og temperaturudsving, og alle produkter opfylder de strengeste internationale standarder. Vores motto »Signals the Best« er indbegrebet af denne filosofi – og din garanti for kvalitet.

UK ▶ PR electronics A/S offers a wide range of analog and digital signal conditioning devices for industrial automation. The product range includes Isolators, Displays, Ex Interfaces, Temperature Transmitters, and Universal Devices. You can trust our products in the most extreme environments with electrical noise, vibrations and temperature fluctuations, and all products comply with the most exacting international standards. »Signals the Best« is the epitome of our philosophy – and your guarantee for quality.

FR ▶ PR electronics A/S offre une large gamme de produits pour le traitement des signaux analogiques et numériques dans tous les domaines industriels. La gamme de produits s'étend des transmetteurs de température aux afficheurs, des isolateurs aux interfaces SI, jusqu'aux modules universels. Vous pouvez compter sur nos produits même dans les conditions d'utilisation sévères, p.ex. bruit électrique, vibrations et fluctuations de température. Tous nos produits sont conformes aux normes internationales les plus strictes. Notre devise »SIGNALS the BEST« c'est notre ligne de conduite - et pour vous l'assurance de la meilleure qualité.

DE ▶ PR electronics A/S verfügt über ein breites Produktprogramm an analogen und digitalen Signalverarbeitungsgeräte für die industrielle Automatisierung. Dieses Programm umfasst Displays, Temperaturtransmitter, Ex- und galvanische Signaltrenner, und Universalgeräte. Sie können unsere Geräte auch unter extremen Einsatzbedingungen wie elektrisches Rauschen, Erschütterungen und Temperaturschwingungen vertrauen, und alle Produkte von PR electronics werden in Übereinstimmung mit den strengsten internationalen Normen produziert. »Signals the Best« ist Ihre Garantie für Qualität!

LOOP-POWERED LCD INDICATOR

PREVIEW TYPE 5531

Table of contents

Application 4
Technical characteristics 4
Mounting / installation 5
Technical specifications 6
Special conditions for safe use 8
Field enclosure type 8501 9
Ordering codes 10
Accessories 10
Block diagram 10
Programming 11
Routing diagram 11

LOOP-POWERED LCD INDICATOR 5531

- *4 digit 1/8 DIN (48 x 96 mm) loop-powered LCD display*
- *Easy push-button configuration*
- *Backlit LCD display is readable in low light conditions*
- *Display can be mounted in the safe or Ex area*
- *Available with the 8501 field enclosure*

Application

- The 5531 indicator is powered by the 4 to 20 mA current loop and is easily scaled to display the correct process value.
- Because it does not require separate power wiring, the 5531 is perfect for remote display of process loops.
- The 5531A display can be panel-mounted in the safe area or Ex Zone 2 (gas).
- The 5531B1 Ex display includes the 8501 enclosure and can be mounted in Ex Zone 2 or 22 (gas or dust).
- The 5531B2 includes the 8501 enclosure and can be mounted in Ex Zone 1, 2, 21 or 22 (gas or dust).

Technical characteristics

- With a full measurement range of 3.6 to 23 mA, the 5531 is NAMUR NE43 compliant.
- The display can be push-button scaled to any range between -9999 to 9999, and reverse display action is possible.
- The LCD backlight can be set to half or full intensity for easy viewing in low light conditions.

- With the backlight turned off, the display only requires 1.5 VDC, (75 Ω loop load).
- The input is HART transparent.
- The front push-buttons can be disabled to prevent unauthorized adjustment.

Mounting / installation

- Once panel-mounted with the included gasket, the 5531 provides IP65 ingress protection.

Technical specifications

Environmental conditions:

Specifications range	-20°C to +60°C
Storage temperature	-20°C to +60°C
Calibration temperature	20...28°C
Relative humidity	< 95% RH (non-cond.)
Protection degree, from front	IP65

Mechanical specifications:

Dimensions (HxWxD), 5531A, 5531B	48 x 96 x 120 mm
Cut-out dimensions (HxW)	44.5 x 91.5 mm
Weight approx., 5531A, 5531B	200 g
Dimensions (HxWxD), 5531B1, 5531B2	92 x 112 x 143 mm
Cable glands / cable diameter	2x M16 x 1.5 / Ø 5...8 mm
Dimensions, 8501 backplate	112 x 112 mm
Weight approx., 5531B1, 5531B2	900 g
Wire size, connector terminal 1 - 4	0.13...2.08 mm^2/ AWG 26...14 stranded wire
Screw terminal torque	0.5 Nm

Common electrical specifications:

Supply	Input loop-powered
Signal / noise ratio	> 60 dB
Response time (0...90%, 100...10%)	< 1 s
Updating time	500 ms

Input and output specifications:

Input range	4...20 mA
Measurement range	3.6...23 mA
Input voltage drop, without backlight	< 1.5 V @ 20 mA
Input voltage drop, with full backlight	< 10.5 V @ 20 mA
Loop error detection, 4...20 mA:	
Low detection (InLo)	~ < 3 mA
High detection (InHi)	~ > 24 mA
Display readout	± 9999 (4 digits)
Digit height	16 mm

Accuracy values		
Input	Absolute accuracy	Temperature coefficient
4...20 mA	≤ ±0.1% of span	≤ ±0.01% of span / °C

EMC immunity influence	< ±0.5% of span

Approvals:

NI:

5531A:

KEMA 05ATEX1044 X..... II 3 G Ex ic IIC T6 Gc
(-20°C ≤ Ta ≤ +60°C)

5531B1:

KEMA 05ATEX1044 X..... II 3 G Ex ic IIC T6 Gc
(-20°C ≤ Ta ≤ +60°C)
II 3 D Ex ic IIIC T85°C Dc
(-5°C ≤ Ta ≤ +60°C)

IS:

5531B:

KEMA 05ATEX1105X..... II 2 G Ex ia IIC T6 Gb
(-20°C ≤ Ta ≤ +60°C)

5531B2:

KEMA 05ATEX1105 X..... II 2 G Ex ia IIC T6 Gb
(-20°C ≤ Ta ≤ +60°C)
II 2 D Ex ia IIIC T85°C Db
(-5°C ≤ Ta ≤ +60°C)

Ex data:

U_i ..... : 45 VDC
I_i ..... : 120 mA
P_i ..... : 0.9 W
C_i ..... : 0 nF
L_i ..... : 0 mH

Approvals:

EMC 2014/30/EU	EN 61326-1
EAC	TR-CU 020/2011

Ex:

ATEX 2014/34/EU, 5531A and 5531B1	KEMA 05ATEX1044 X
ATEX 2014/34/EU, 5531B and 5531B2	KEMA 05ATEX1105 X
EAC Ex TR-CU 012/2011	RU C-DK.GB08.V.00410 (5531B)

Special conditions for safe use

For applications in explosive dust atmospheres, the Loop Powered LCD Indicator shall be installed in such a way that the risk of mechanical danger is low, and that it shall be protected from exposure to UV light.

Electrostatic charging of the plastic display and the label shall be avoided.

Year of manufacture can be taken from the first two digits of the serial number.

Field enclosure type 8501

The field enclosure type 8501 complies with industrial standards for efficient protection of process equipment in wet areas up to IP65. When 8501 is delivered with a built-in PReview 5531, the assembled unit is approved for installation in explosive gas atmospheres as well as in explosive dust environments. The technical specifications of the field enclosure can be found in the 8501 data sheet.

Ordering codes

Type	Input signal area classification	Field enclosure
5531A	4...20 mA from safe and zone 2	No
5531B1	4...20 mA from safe, zone 2 and 22	Yes
5531B	4...20 mA from zone 0	No
5531B2	4...20 mA from zone 0 and 20	Yes

Accessories

Type	Specification
8335	Splash proof cover
8501	Field enclosure for 5531A

Block diagram

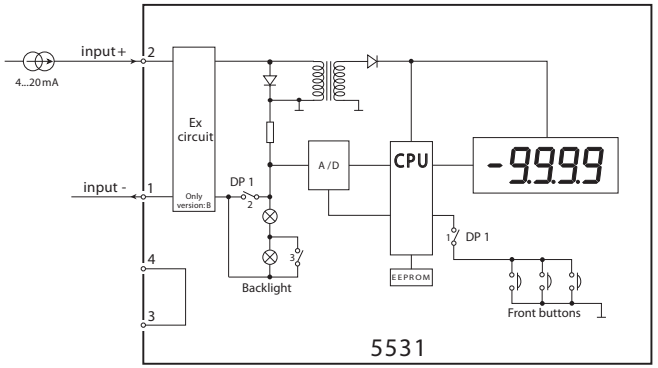

Programming

DP 1 Front keyboard	SW ON	SW OFF
Keys locked	-	1
Keys NOT locked	1	-

DP 1 Backlight	SW ON	SW OFF
Off	2	-
Half intensity	3	2
Full intensity	-	2, 3

Routing diagram

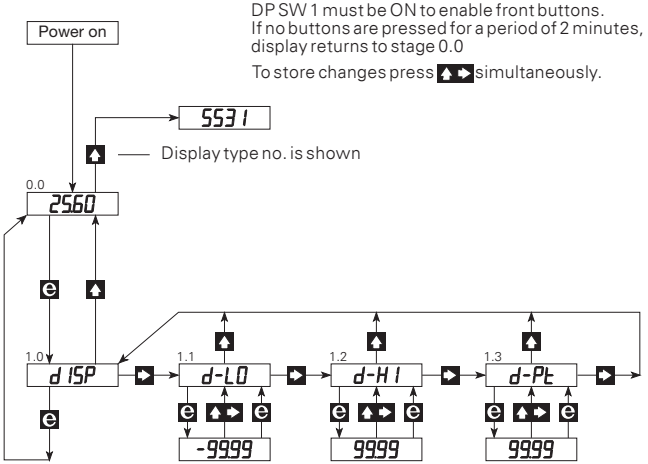

Displays Programmable displays with a wide selection of inputs and outputs for display of temperature, volume and weight, etc. Feature linearization, scaling, and difference measurement functions for programming via PReset software.

Ex interfaces Interfaces for analog and digital signals as well as HART® signals between sensors / I/P converters / frequency signals and control systems in Ex zone 0, 1 & 2 and for some devices in zone 20, 21 & 22.

Isolation Galvanic isolators for analog and digital signals as well as HART® signals. A wide product range with both loop-powered and universal isolators featuring linearization, inversion, and scaling of output signals.

Temperature A wide selection of transmitters for DIN form B mounting and DIN rail devices with analog and digital bus communication ranging from application-specific to universal transmitters.

Universal PC or front programmable devices with universal options for input, output and supply. This range offers a number of advanced features such as process calibration, linearization and auto-diagnosis.





www.prelectronics.fr
sales-fr@prelectronics.com



www.prelectronics.de
sales-de@prelectronics.com



www.prelectronics.es
sales-es@prelectronics.com



www.prelectronics.it
sales-it@prelectronics.com



www.prelectronics.se
sales-se@prelectronics.com



www.prelectronics.co.uk
sales-uk@prelectronics.com



www.prelectronics.com
sales-us@prelectronics.com



www.prelectronics.cn
sales-cn@prelectronics.com

Head office

Denmark
PR electronics A/S
Lerbakken 10
DK-8410 Rønde

www.prelectronics.com
sales-dk@prelectronics.com
tel. +45 86 37 26 77
fax +45 86 37 30 85



DS CERTIFIED
QUALITY SYSTEM AND ENVIRONMENTAL MANAGEMENT SYSTEM
DS/EN ISO 9001
DS/EN ISO 14001
DANAK