MURR ELEKTRONIK
stay connected

MVP8-P3 DIO4 DIO4 8xM8-3 IOLB12 B0

IO-Link Class B Hub

IO-Link hub in 30 mm plastic housing
1 × M12 IO-Link Class B
8 × M8 I/O
8 configurable digital inputs/outputs
Galvanically isolated voltage groups
Preconfigured parameter range
Connection cables are in the online shop under "Connection Technology".

Link to Product

Illustration



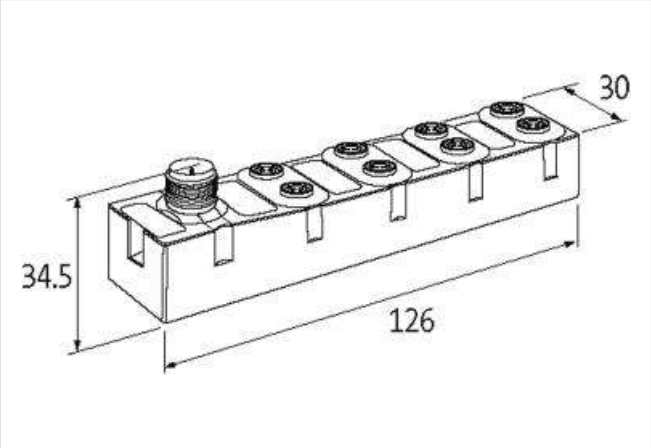

Product may differ from Image

Commercial data	
ECLASS-6.0	27242604
ECLASS-6.1	27242604
ECLASS-7.0	27242604
ECLASS-8.0	27242604
ECLASS-9.0	27242604
ECLASS-10.1	27242604
ECLASS-11.1	27242604
ECLASS-12.0	27242604
customs tariff number	85389099
GTIN	4048879865029
Packaging unit	1

Electrical data | Supply	
Operating voltage DC	24 V
Operating voltage US DC	24 V
Operating voltage US DC min.	18 V
Operating voltage US DC max.	30 V
Operating voltage UA DC	24 V
Operating voltage UA DC min.	18 V

The information in this Product-PDF has been compiled with the utmost care.
Liability for the correctness completeness and topicality of the information is restricted to gross negligence. Version: 2024-02-02

MURR ELEKTRONIK
stay connected

Operating voltage UA DC max.	30 V
Current operating per 2 ports max.	1 A (X0+X1, X2+X3, X4+X5, X6+X7)
Current consumption max.	50 mA
Total current UA max.	4 A
Total current US max.	4 A
Electrical data | Input	
Type input	Type 1, Type 3
Input filter time	1 ms
Electrical data | Output	
Output current per pin max.	2 A
Industrial communication | IO-Link	
IO-Link process data length output	2 Bytes
IO-Link process data length input	2 Bytes
IO-Link revision ID	V1.1.2
IO-Link revision compatibility	V1.1.3
IO-Link type	Device
IO-Link cycle time min.	1 ms
IO-Link transmission rate	COM3 (230.4 kbit/s)
Port Class	B
Diagnostics	
Actuator warning	yes
Diagnostic via LED	per module and channel
IO-Link events	No voltage, Undervoltage supply
Short circuit diagnosis	yes
LED display	Ethernet connection/data traffic
Status indication LED	green
Overload diagnosis	yes
Device protection | Electrical	
Installation height max. ASL	3000 m
Degree of protection (EN IEC 60529)	IP68
Galvanic separation US/UA	yes
Short-circuit protected	yes
Overload resistant	yes
Mechanical data | Mounting data	
Suitable for mounting type	2-hole screw mounting
Height	126 mm
Width	30 mm
Depth	34,5 mm
Environmental characteristics | Climatic	
Operating temperature min.	-25 °C
Operating temperature max.	70 °C
Storage temperature min.	-40 °C
Storage temperature max.	85 °C
Conformities, approvals	
Product standard	EN 61131-2
Connection type 3	
Connection type 1	X0-X3
Connection type 2	X4-X7
Connection type 3	XZ1
Family construction form	M8
Gender	female

The information in this Product-PDF has been compiled with the utmost care.
Liability for the correctness completeness and topicality of the information is restricted to gross negligence. Version: 2024-02-02

Color contact carrier	black
Coding	A
No. of poles	3
PIN 1	24 V DC UA
PIN 3	0 V UA
PIN 4	DIO UA
Family construction form	M8
Gender	female
Color contact carrier	black
Coding	A
No. of poles	3
PIN 1	24 V DC US
PIN 3	0 V US
PIN 4	DIO US
Family construction form	M12
Gender	male
Coding	A
No. of poles	5
PIN 1	24 V DC US (L +)
PIN 2	24 V DC UA (P 24)
PIN 3	0 V US (L -)
PIN 4	C / Q / IO-Link
PIN 5	0 V UA (N 24)

The information in this Product-PDF has been compiled with the utmost care.
Liability for the correctness completeness and topicality of the information is restricted to gross negligence. Version: 2024-02-02