

Image may differ from product. See technical specification for details.

NUTR 45 A

Support roller (yoke-type track roller) with flange rings, integral sealing and relubrication feature

Support rollers (yoke-type track rollers) are designed to run on all types of tracks and to be used in cam drives, conveyor systems, etc. They are based on a double row full complement cylindrical roller bearing with an inner ring and have a thick-walled outer ring with an improved crowned running surface. They are supplied sealed and ready-to-mount. The inner ring contains a lubrication hole to facilitate relubrication.

- High radial load carrying capacity
- Accommodate relatively heavy axial loads due to skew or tilting
- Long service life
- Ready to mount
- Sealed for increased reliability, with relubrication feature

Overview

Dimensions

Functional outside diameter	85 mm
Bore diameter	45 mm
Width, total	32 mm
Width, outer ring	30 mm

Performance

Basic dynamic load rating	58.3 kN
Basic static load rating	75 kN
Limiting speed	1 700 r/min

Properties

Bearing part	Complete track roller
Rolling elements	Cylindrical rollers
Number of rows	2
Outer ring profile	Crowned
Axial guidance of outer ring	Yes
Number of flanges, outer ring	2
Cage	Without
Radial internal clearance	Between C2 and CN
Tolerance class	Other
Material, bearing	Bearing steel
Coating	Without
Sealing	Seal on both sides
Sealing type	Labyrinth
Lubricant	Grease
Relubrication feature	With

Logistics

Product net weight	0.885 kg
eClass code	23-05-09-03
UNSPSC code	31171512

Technical specification

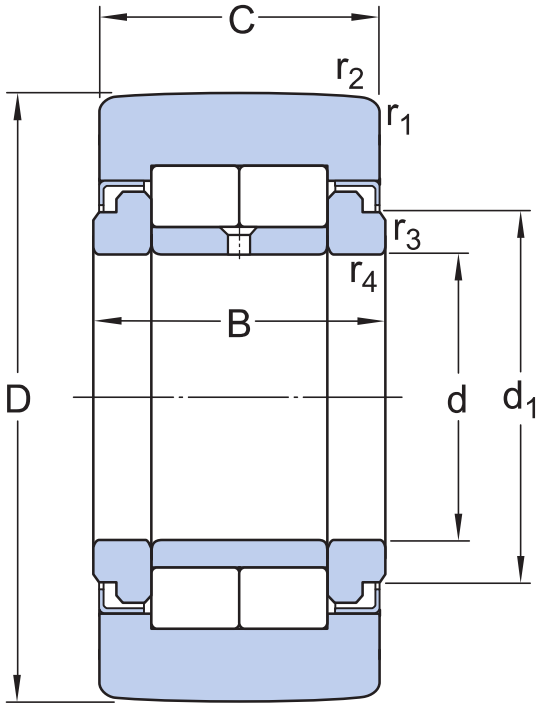

Dimensions

D	85 mm	Outside diameter
d	45 mm	Bore diameter
C	30 mm	Width outer ring
B	32 mm	Width inner ring
d_1	55.2 mm	Outside diameter flange ring
$r_{1,2}$	min. 1.1 mm	Chamfer dimension outer ring
$r_{3,4}$	min. 0.6 mm	Chamfer dimension flange ring bore

Calculation data

Basic dynamic load rating	C	58.3 kN
Basic static load rating	C_0	75 kN
Fatigue load limit	P_u	9.3 kN
Maximum dynamic radial loads	F_r	max. 32.5 kN
Maximum static radial loads	F_{0r}	max. 46.5 kN
Limiting speed		1 700 r/min

Tolerances and clearances

GENERAL SUPPORT ROLLER SPECIFICATIONS

- Tolerances: Normal, Other
- Radial internal clearance: table

BEARING INTERFACES

- Seat tolerances for standard conditions
- Tolerances and resultant fit

More Information

Product details

- Designs and variants
- Lubrication
- General support roller specifications
- Loads
- Temperature limits
- Speed limits
- Design considerations
- Mounting
- Designation system

Engineering information

- Principles of rolling bearing selection
- General bearing knowledge
- Bearing selection process
- Bearing interfaces
- Lubrication
- External sealing, mounting and dismounting
- Bearing failure and how to prevent it

Tools

- SKF Product select
- Bearing Frequency Calculator
- SimPro Quick
- LubeSelect for SKF greases
- Heater selection tool

Terms of use

By accessing and using this website / app owned and published by AB SKF (publ.) (556007-3495 · Gothenburg) (“SKF”), you agree to the following terms and conditions:

Warranty Disclaimer and Limitation of Liability
Although every care has been taken to assure the accuracy of the information on this website / app, SKF provides this information "AS IS" and DISCLAIMS ALL WARRANTIES, EXPRESS OR IMPLIED, INCLUDING, BUT NOT LIMITED TO, IMPLIED WARRANTIES OF MERCHANTABILITY AND FITNESS FOR A PARTICULAR PURPOSE. You acknowledge that your use of this website / app is at your sole risk, that you assume full responsibility for all costs associated with use of this website / app, and that SKF shall not be liable for any direct, incidental, consequential, or indirect damages of any kind arising out of your access to, or use of the information or software made available on this website / app.

Any warranties and representations in this website / app for SKF products or services that you purchase or use will be subject to the agreed upon terms and conditions in the contract for such product or service.

Further, for non-SKF websites / apps that are referenced in our website / app or where a hyperlink appears, SKF makes no warranties concerning the accuracy or reliability of the information in these websites / apps and assumes no responsibility for material created or published by third parties contained therein. In addition, SKF does not warrant that this website / app or these other linked websites / apps are free from viruses or other harmful elements.

Third Party Services
When viewing YouTube content via the SKF website(s) (i.e. using YouTube API Services), you agree to be bound by the YouTube Terms of Service.

Copyright
Copyright in this website / app copyright of the information and software made available on this website / app rest with SKF or its licensors. All rights are reserved. All licensed material will reference the licensor that has granted SKF the right to use the material. The information and software made available on this website / app may not be reproduced, duplicated, copied, transferred, distributed, stored, modified, downloaded or otherwise exploited for any commercial use without the prior written approval of SKF. However, it may be reproduced, stored and downloaded for use by individuals without prior written approval of SKF. Under no circumstances may this information or software be supplied to third parties.

This website /app includes certain images used under license from Shutterstock, Inc.

Trademarks and Patents
All trademarks, brand names, and corporate logos displayed on the website / app are the property of SKF or its licensors, and may not be used in any way without prior written approval by SKF. All licensed trademarks published on this website / app reference the licensor that has granted SKF the right to use the trademark. Access to this website / app does not grant to the user any license under any patents owned by or licensed to SKF.

Changes
SKF reserves the right to make changes or additions to this website / app at any time.