stay connected

MSUD VALVE PLUG FORM A 18MM

PUR 3X0.75 black UL/CSA, drag ch 10m

Form A (18 mm)
24 V AC/DC with LED and suppression

Further cable lengths on request. Plastic housings with good resistance against chemicals and oils. The resistance to aggressive media should be individually tested for your application. Further details on request.

Link to Product

Illustration



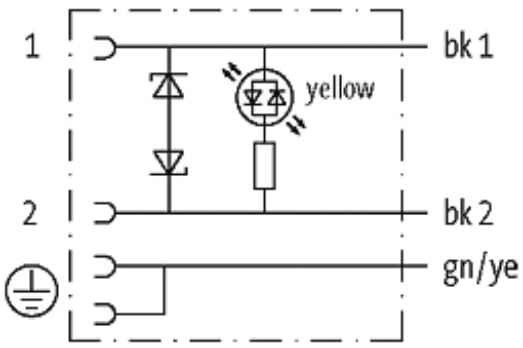

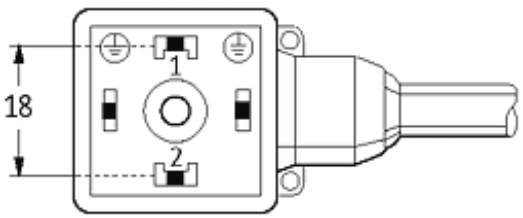

The information in this brochure has been compiled with the utmost care.
Liability for the correctness completeness and topicality of the information is restricted to gross negligence. Version: 05/15

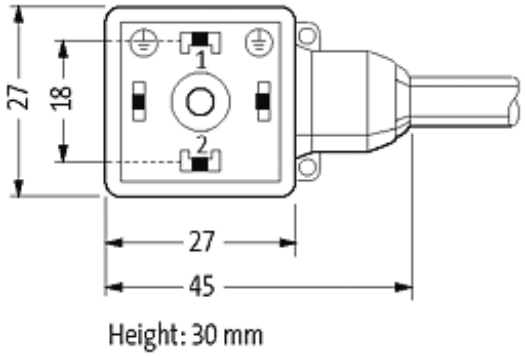

Product may differ from Image

Approvals

Form

	18021

Technical Data

Operating voltage	24 V AC/DC ±25 %
Operating current per contact	max. 4 A
Switch off peak	max. 55 V
Switch off delay time	max. 20 ms
Locking of ports	M3 (recommended torque 0.4 Nm)
Protection	IP67 inserted and tightened (EN 60529)
Housing	Black plastic (gray on request)

Cables

Cable number	636
No./diameter of wires	3 × 0.75 mm²
Wire isolation	PP (bk, num, gnye)
C-track properties	5 Mio.
Torsion	2 Mio. ± 180 °/m
Jacket Color	black
Shore hardness outer jacket	90 ± 5A
Material (jacket)	PUR (UL/CSA)
Outer diameter	approx. 5.9 mm
Bend radius (fixed)	5 × outer Ø
Bend radius (moving)	10 × outer Ø
Temperature range (fixed)	-40...+80 °C
Temperature range (mobile)	-25...+80 °C

General data

Temperature range	-25...+85 °C, depending on cable quality

The information in this brochure has been compiled with the utmost care.
Liability for the correctness completeness and topicality of the information is restricted to gross negligence. Version: 05/15

stay connected

Commercial data	
country of origin	CZ
customs tariff number	85444290
minimum order quantity	1

The information in this brochure has been compiled with the utmost care.
Liability for the correctness completeness and topicality of the information is restricted to gross negligence. Version: 05/15