

# Visual Signals - Explosion Proof
# GRP **CALL POINT**

## Explosion Proof Manual Call Point > GRP
## CP135 Series

### Product overview

The CP135 manual call point range has been approved for use in potentially explosive atmospheres and harsh environmental conditions.

Typical applications are Oil and Gas, On-shore and Offshore, Chemical, Petrochemical, Refineries & Marine locations etc.

It is compatible for use with a PLC, DCS and ESD systems via 4-20mA output. It is ideally suited for use in fire alarm systems and an addressable option with diode fitted is available.

The range also offers an additional visual LED indication option; red, green (or both) can be fitted. When fault or alarm status arises the green LED will be overridden by the red LED.

The design allows for termination inside the unit.

### Features/Certifications

- Approved by ATEX, IECEx
- CQST (Available on request only)
- ATEX: II 2G **Exd IIB +$H_2$ T4 - T6** (incorporating IIA)
- Zones 1, 2, 21 & 22
- Conforms to EN (IEC) 60079-0 EN (IEC) 60079-1 and EN54
- Dustproof & Weatherproof

## CP135 Series > Ordering Information

Standard Product Selection

Follow the chart (right) to generate your part code.

| | Switch | Duty Label | Tag Label | Glass Label* | LED Indicator | Features | Cable Entry | Entry | Finish Colour |
|---|---|---|---|---|---|---|---|---|---|
| CP135 + | **S** = Single Switch | **Y** = Yes | **Y** = Yes | **Y** = Glass Label (standard) | **L** = Red & Green | **F** = Lift Flap | **A** = M20 | **T** = Top Face | **RD** = Red |
| | | | | | **R** = Red | **R** = Resistor (specify) | | | **YW** = Yellow |
| | **D** = Double Switch | **N** = No | **N** = No | **N** = No Glass Label | **G** = Green | **D** = Diode (specify) | **B** = M25 | **B** = Bottom Face | **BU** = Blue |
| | | | | **O** = Other (specify) | **N** = No LED | **N** = No Features | | | **BL** = Black |
| | | | | | | | | | **OR** = Other |

* Standard break glass label wording is: 'Break Glass Press Here'

**MODEL CONFIGURATOR** (By using the table above, complete this box sequence to select your required manual call point).

| CP135 | | | | | | | | | | |
|---|---|---|---|---|---|---|---|---|---|---|
| | Switch | Duty Label | Tag Label | Reset | Glass Label* | LED Indicator | Features | Cable Entry | Entry | Finish Colour |

* Standard break glass label wording is: 'Break Glass Press Here'

Note: All customers orders will be confirmed in writing. Care should be taken that the correct code has been ordered as be-spoke manufactured products cannot be returned for exchange or credit later.

**Kg** 1.5 | **°C** -40+70 | **IP** 66 | **INDUSTRIAL** | **MARINE** | **FIRE** | **GRP**

APPROVALS and CONFORMITIES

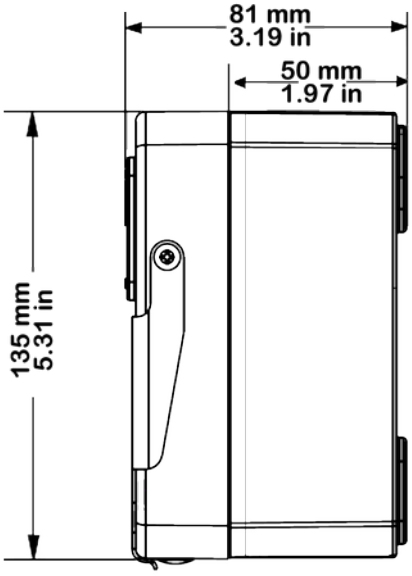


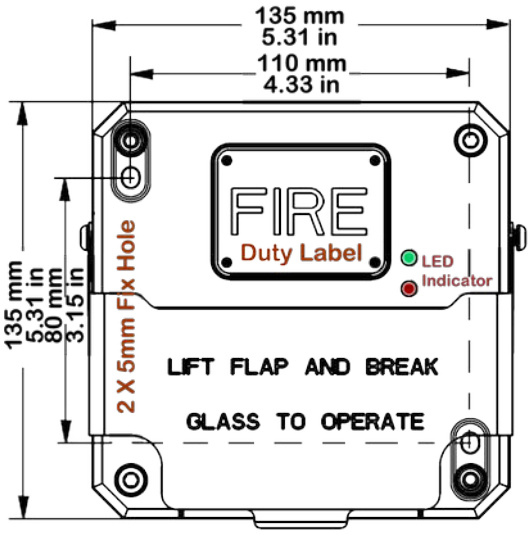


# Explosion Proof Manual Call Point > GRP
# CP135 Series

## General Information

| | |
|---|---|
| EX CODE: | Exd IIB+$H_2$ T4 - T6 |
| CERTIFICATION: | ATEX (Nemko 14 5454X), IECEx (NEM 14.0015X) |
| | CQST (Available on request only) |
| TYPE: | Manual Call Point |

### Mechanical Specifications

| | |
|---|---|
| MATERIAL: | Enclosure: GRP (Glass Reinforced Plastic) |
| ENCLOSURE COLOUR: | Red (RAL3001), Yellow (RAL1003) |
| | Blue (RAL5005), Black (RAL9004) |
| AMBIENT TEMPERATURE: | -40 to +70 |
| HUMIDITY: | ≤ 95% RH |
| WEIGHT: | 1.5 Kg / 3.31 lb |
| DIMENSIONS: | Width/Length: 135mm / 5.31" Height: 80.5mm / 3.17" |
| INGRESS PROTECTION: | IP 66 |

### Electrical Specifications

| | |
|---|---|
| SWITCH RATING: | **30v Dc:** 6A (Resistive), 6A (Inductive) |
| | **250v Ac:** 11A (Resistive), 6A (Inductive) |
| OUTPUT: | On-Off Output (NC/NO) |
| TERMINATION: | Accepts upto ≤ 2.5mm$^2$ incorporating rising clamp protectors |
| CABLE ENTRY: | 2 x M20 or M25. |
| | For 1/2" or 3/4"NPT requirements, male/female adapter glands are available. Contact sales dept for further part codes. |

## Accessories

| | |
|---|---|
| 50200: | M20 E1EX Nickel Plated Brass Gland (Multi Armour Cone) Atex Cat 2 &3, EExde IIC 2 GD<br>Cable ID 11 - 15.5mm<br>OD 14.5 - 21mm<br>Gland for Multi Armoured Cable * |
| 50201: | M20 A2EX Nickel Plated Brass Gland<br>Atex Cat 2 & 3, EExde IIC 2 GD<br>Cable OD 11 - 15.5mm<br>Gland for Unarmoured Cable * |
| 50202: | M20 E1EX-QS Nickel Plated Brass Gland<br>(Ex d IIC, Ex e IIC, Ex nR IIC, Ex tb IIIC)<br>Cable OD 14.5 - 20.5mm<br>Barrier Gland for Steel and Aluminium Armoured Cable * |
| 50203: | M20 A2EX Quick Stop Nickel Plated Brass Gland<br>(Ex d IIC, Ex nR IIC, Ex tb IIC)<br>Cable OD 9 - 15mm<br>Barrier Gland for Unarmoured Cable * |
| 50204: | M20 Nickel Plated Brass Stopping Plug<br>Atex EExde I/IIC<br>Standard M20 Blanking Plug |
| 50221: | Epoxy Minute Adhesive 24m/l tube<br>One tube sufficient for five barrier glands |
| * 25mm | Thread length for GRP products |
| Note: | M25 options available for the above |