MURR ELEKTRONIK
stay connected

M12 FEMALE 90° SHIELDED WIREABLE SCREW TERM.

5-pol. max.0,75mm² 6-8mm

Link to Product

Illustration

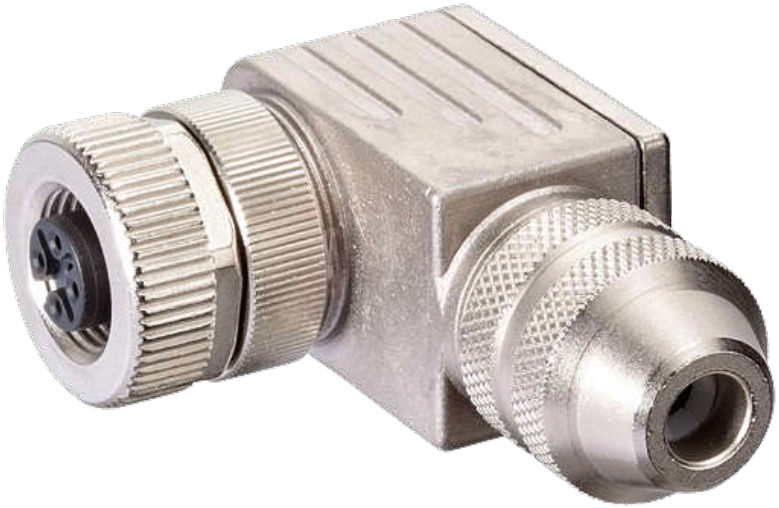

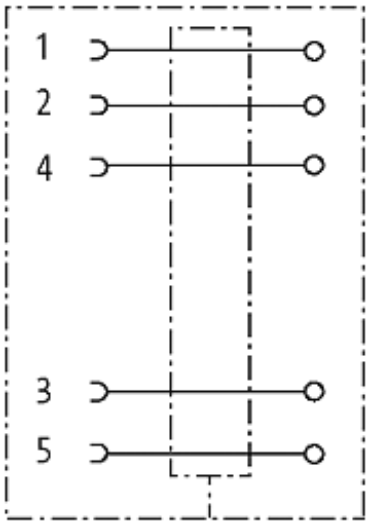

The information in this brochure has been compiled with the utmost care.
Liability for the correctness completeness and topicality of the information is restricted to gross negligence. Version: 08/17

stay connected

Female

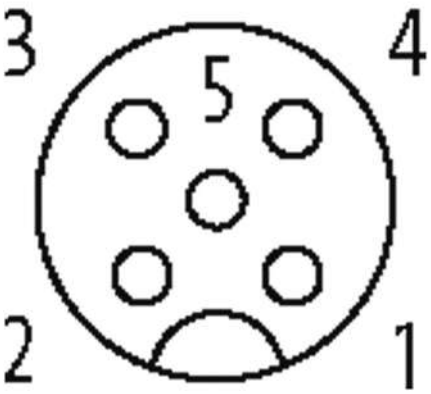

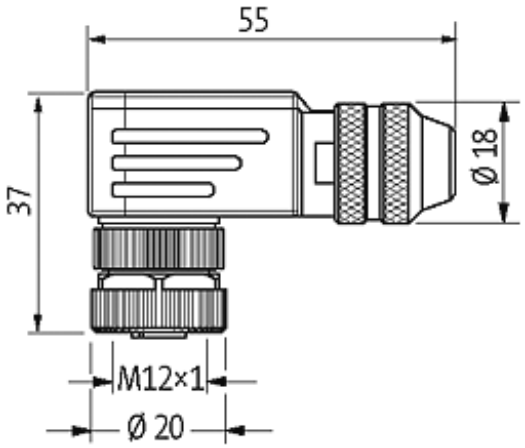

Product may differ from Image

Form	
Form	13441
Technical Data	
Operating voltage	max. 60 V AC/DC
Operating current per contact	max. 4 A
Connection cross section	max. 0.75 mm²
Sealing range (cable Ø)	6...8 mm
Protection	IP67 inserted and tightened (EN 60529)
Housing	Brass, nickel plated
General data	
Temperature range	-25...+85 °C
Commercial data	
country of origin	DE
customs tariff number	85369010
EAN	4048879198776

The information in this brochure has been compiled with the utmost care.
Liability for the correctness completeness and topicality of the information is restricted to gross negligence. Version: 08/17

eClass	27279218
minimum order quantity	1

The information in this brochure has been compiled with the utmost care.
Liability for the correctness completeness and topicality of the information is restricted to gross negligence. Version: 08/17