Datenblatt - Fiche technique - Data sheet

11.01.5918



ROLINE RS232-Kabel 9pol BU-BU, 1,8m

ROLINE Câble RS-232 9 pôles F/F, 1,8m

ROLINE RS232 Cable, DB9 F - F, 1.8 m

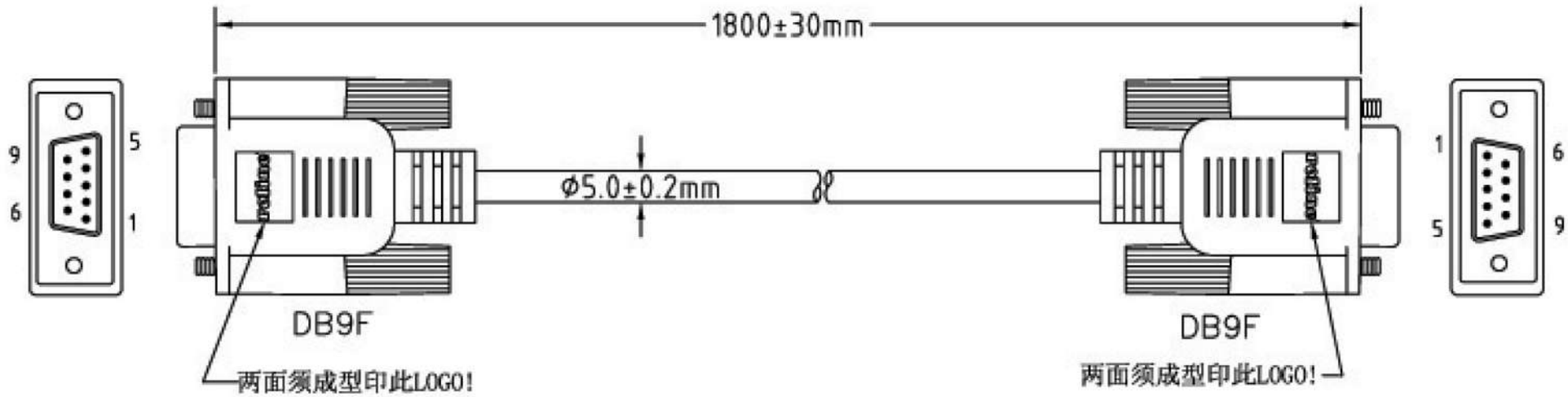

NOTE: 注:线材颜色须用RLA专用米色!

1. CABLE: 28AWG,NON-UL,AL-FOIL,9C+1,BEIGE COLOR,OD=5.0mm.PVC JACKET.
2. LENGTH: 1800mm
3. CONNECTOSR: DB9F*2PCS(黑胶芯)
4. MOLD: MOLDING APPLE TYPE
5. SCREW: 4*40 INCH THUMB SCREW*4
6. CONTACTS:

DB9F	1	2	3	4	5	6	7	8	9	64
DB9F	1	2	3	4	5	6	7	8	9	64

7. OPEN/SHORT TEST: 100% TEST.
   INSULATION: 1M.
8. ALL MUST BE ROHS COMPLIANT.

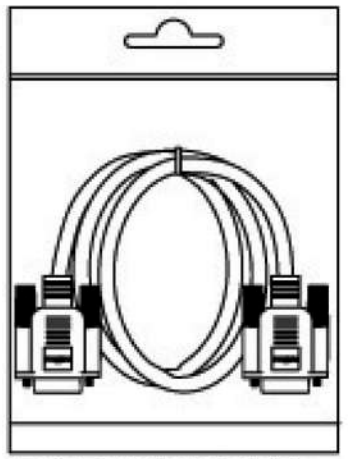

PE BAG(190*300*0.06)
1PCS/PE BAG+吊卡+條碼貼紙

COMPANY	RLA		ITEM NO.	11.01.5918	編號	B3864
REVISION	DATE	DISCRIPTION	DRAWN BY			
REV.A/0	2006.04.28	C13-2604056	DESIGNED BY		ROTRONIC CO.. LTD.	SCALE
			APPROVAL BY			UNIT(mm)
						DRAWING NO.

Specification		28AWG*9C+EA/NONUL OD:5.0MM		
Inner Wire		9C		
Conductor	Cond Size	7/0.12±0.008MM		
	Material	Timned copper		
	Twist Space	10.8MM		
Insulation	Material	PVC/32P		
	Diameter	0.90±0.05MM		
		/		
Twist	Twist Space	/		
	Drain Wire	/		
Shielded	Shielded Way	/		
	Coverage Rate	/		
Midde Cover		/		
		/		
		/		
Assemble	Twist Space	80MM		
	Drain Wire	7/0.12±0.008MM Timned copper		
	Foil Specifications	0.025*14MM, Single conductor toward outside.	Filling	/
	Cotton paper Shielded	/	Overlapping	25%
Coverage	Construct	/		
	Coverage Rate	/		
Cover	Material	PVC/70P (RLA beige)		
	Outer Dia	5.0±0.15		
	Surface finished	Semi beige		
Printing				

Constructin:

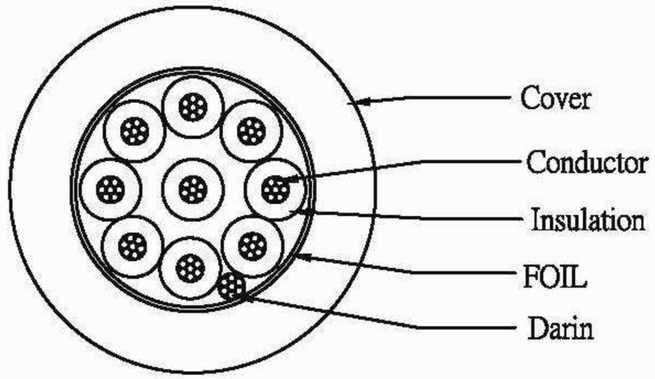

Filament color:

Pairs：Gray/Yellow/Red/Purple/Blue/Brown/White/Green/Black

Cover： beige

COMPANY	/	ITEM NO.	/	NO	/

REVISION	DATE	DISCRIPTION
REV. A/0	20110224	

DRAWN BY	
DESIGNED BY	
APPROVAL BY	

Rotronic Co.,Ltd.

SCALE	NON
UNIT(mm)	
DRAWING NO.	2010070502