- **Port size: 3/8” ... 3/4” (ISO G/NPT)**
- **Excelon design allows in-line installation or modular installation with other Excelon products**
- **High efficiency water and particle removal**
- **Quick release bayonet bowl**
- **Push to lock adjusting knob with tamper resistant accessory**
- **Flow sensor provides a nearly constant oil/air ratio over a wide range of flows**
- **All round (360°) visibility of sightfeed dome for ease of drip rate setting**



Technical features

Medium:
Compressed air only
Maximum operating pressure:
10 bar (145 psi)
Pressure range:
0,3 ...10 bar (4 ... 145 psi)
Filter element:
40 µm
Port size:
G3/8, G1/2, G3/4,
Gauge port:
Rc 1/8

Relieving:
Standard
Drain:
Manual or automatic
Automatic drain operating conditions (float operated):
Bowl pressure required to close drain: > 0,35 bar (5 psi)
Bowl pressure required to open drain: ≤ 0,2 bar (2.9 psi)
Minimum air flow required to close drain: 1 dm^3/s (2 scfm)
Manual operation: depress pin inside drain outlet to drain bowl

Ambient/Media temperature:
Tranparent bowl:
-34° ... +50°C (-30° ... +122°F)
Air supply must be dry enough to avoid ice formation at temperatures below +2°C (+35°F).

Materials:
Body: Die cast aluminium
Transparent bowl: PC with steel guard
Metal bowl: Die cast aluminium
Elastomers: CR & NBR

Please contact IMI Norgren for following options:

Operation pressure:
Metal bowl: 17 bar (246 psi)
Pressure range:
0,3 ... 4 bar (4 ... 58 psi)
0,7 ... 17 bar (2 ... 250 psi)

Port size:
3/8 PTF 1/2 PTF , 3/8 PTF
Filter element:
5 µm

Relieving:
Without
Ambient/Media temperature:
Metal bowl:
-34 ... +80°C (-30 ... +176°F)

Technical data BL74 (Filter/Regulator, Lubricator and Gauge) - standard models

Symbol	Port size	Size	Pressure range (bar)	Element (µm)	Drain	Lubricator	Mounting	Shut-off valve	Model
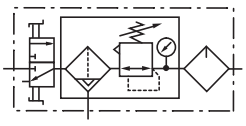	G3/8	—	0,3 ... 10	40	Automatic	Micro fog	Quikclamp with wall bracket®	With	BL74-301G
	G1/2	Basic	0,3 ... 10	40	Automatic	Micro fog	Quikclamp with wall bracket®	With	BL74-401G
	G3/4	—	0,3 ... 10	40	Automatic	Micro fog	Quikclamp with wall bracket®	With	BL74-601G
	G3/8	—	0,3 ... 10	40	Automatic	Oil fog	Quikclamp with wall bracket®	With	BL74-311G
	G1/2	Basic	0,3 ... 10	40	Automatic	Oil fog	Quikclamp with wall bracket®	With	BL74-411G
	G3/4	—	0,3 ... 10	40	Automatic	Oil fog	Quikclamp with wall bracket®	With	BL74-611G
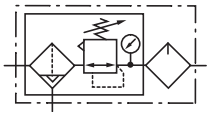	G3/8	—	0,3 ... 10	40	Automatic	Micro fog	Quikclamp with wall bracket®	Without	BL74-305G
	G1/2	Basic	0,3 ... 10	40	Automatic	Micro fog	Quikclamp with wall bracket®	Without	BL74-405G
	G3/4	—	0,3 ... 10	40	Automatic	Micro fog	Quikclamp with wall bracket®	Without	BL74-605G
	G3/8	—	0,3 ... 10	40	Automatic	Oil fog	Quikclamp with wall bracket®	Without	BL74-315G
	G1/2	Basic	0,3 ... 10	40	Automatic	Oil fog	Quikclamp with wall bracket®	Without	BL74-415G
	G3/4	—	0,3 ... 10	40	Automatic	Oil fog	Quikclamp with wall bracket®	Without	BL74-615G
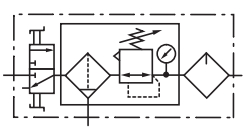	G1/2	Basic	0,3 ... 10	40	Manual	Micro fog	Quikclamp with wall bracket®	With	BL74-421G
	G3/4	—	0,3 ... 10	40	Manual	Micro fog	Quikclamp with wall bracket®	With	BL74-621G
	G3/8	—	0,3 ... 10	40	Manual	Oil fog	Quikclamp with wall bracket®	With	BL74-331G
	G1/2	Basic	0,3 ... 10	40	Manual	Oil fog	Quikclamp with wall bracket®	With	BL74-431G
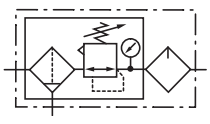	G3/8	—	0,3 ... 10	40	Manual	Micro fog	Quikclamp with wall bracket®	Without	BL74-325G
	G1/2	Basic	0,3 ... 10	40	Manual	Micro fog	Quikclamp with wall bracket®	Without	BL74-425G
	G3/4	—	0,3 ... 10	40	Manual	Micro fog	Quikclamp with wall bracket®	Without	BL74-625G
	G3/8	—	0,3 ... 10	40	Manual	Oil fog	Quikclamp with wall bracket®	Without	BL74-335G
	G1/2	Basic	0,3 ... 10	40	Manual	Oil fog	Quikclamp with wall bracket®	Without	BL74-435G
	G3/4	—	0,3 ... 10	40	Manual	Oil fog	Quikclamp with wall bracket®	Without	BL74-635G

Our policy is one of continued research and development. We therefore reserve the right to amend, without notice, the specifications given in this document. (1998 - 8070b) © 2015 Norgren Inc.

Accessories

Quikclamp®	Quikclamp with wall bracket®	Tamper resistant kit
		
Page 3	Page 3	
4314-51	4314-52	4355-51

Quikmount pipe adaptor *1)	Porting block with three alternative 1/4” ports	2/2 Shut-off valves (for full technical specification see datasheet 8.200.600)	3/2 Shut-off valves (for full technical specification see datasheet 8.200.600)
			
Page 3	Page 3	Page 4	Page 4
G3/8: 4315-10	G1/4: 4316-52	G 3/8: T74B-3GA-P1N	G 3/8: T74T-3GA-P1N
G1/2: 4315-11		G 1/2: T74B-4GA-P1N	G 1/2: T74T-4GA-P1N
G3/4: 4315-12		G 3/4: T74B-6GA-P1N	G 3/4: T74T-6GA-P1N

*1) Please use a Quikmount pipe adaptor if the Quikclamp be mounted at inlet or outlet side.

Pressure switch

Porting block for pressure switch	Pressure switch (0,5 ... 8 bar)
	
Page 4	
0523110000000000	0881300000000000

Padlock

Padlock (brass) with two keys *1)

0613633000000000

*1) For shut-off valves and tamper resistant kit

Gauge

Center back connection, white face (for full technical specification see datasheet 8.900.900)



Pressure range bar *1	Mpa	psi	Ø	Thread size	Model
0 ... 4	0 ... 0,4	0 ... 58	50 mm	R1/8	18-015-011
0 ... 10	0 ... 1	0 ... 145	50 mm	R1/8	18-015-013
0 ... 25	0 ... 2,5	0 ... 362	50 mm	R1/8	18-015-014

*1) primary scale

Our policy is one of continued research and development. We therefore reserve the right to amend, without notice, the specifications given in this document. (1998 - 8070b) © 2015 Norgren Inc.

Dimensions

Dimensions in mm
Projection/First angle

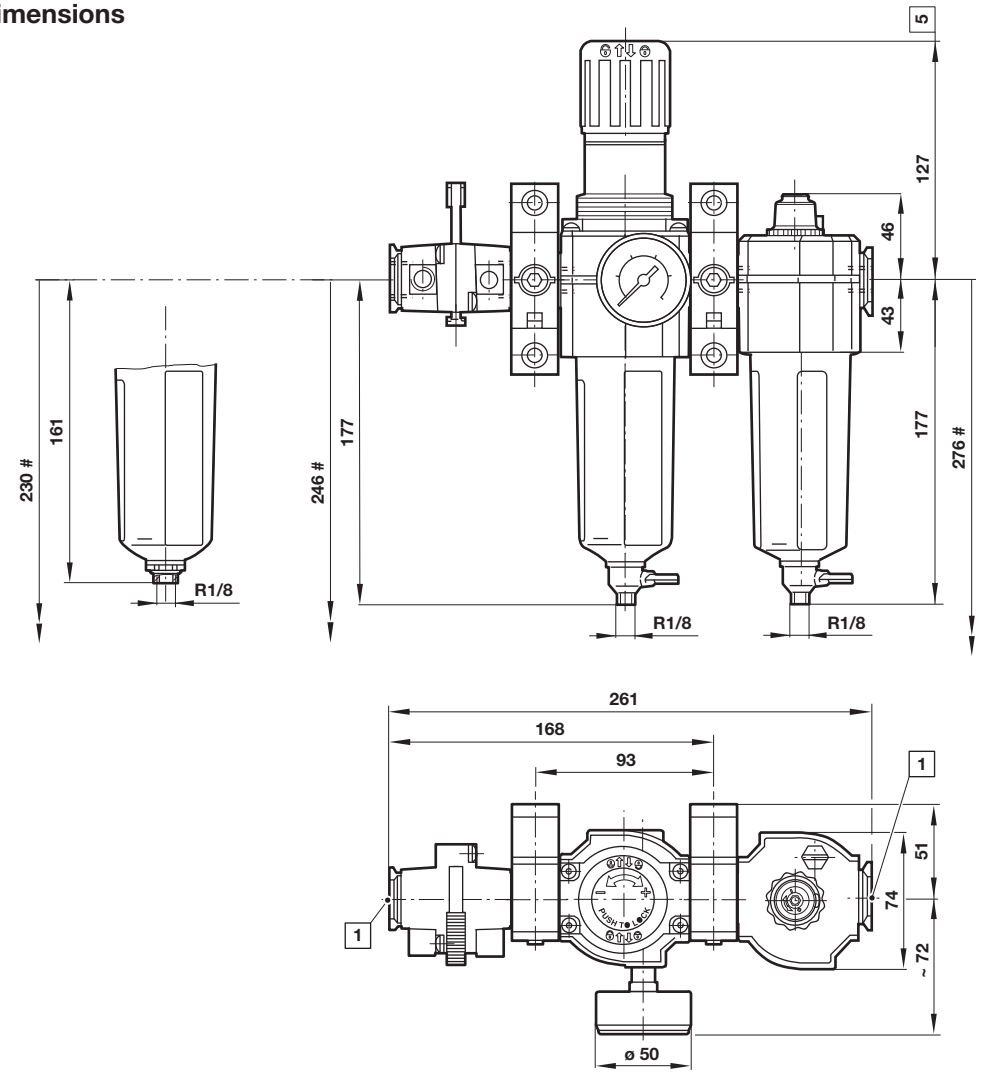

Minimum clearance required to remove bowl
1 Main ports 1/4" or 3/8" ISO G
5 Reduces by 4 mm with knob in locked position

Accessories

Quikclamp®

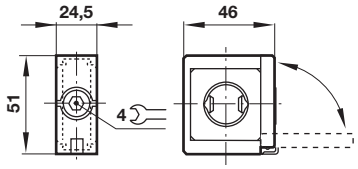

Quikclamp® with wall bracket

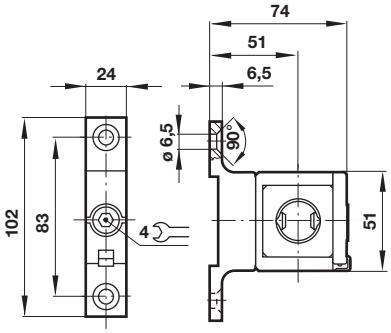

Porting block

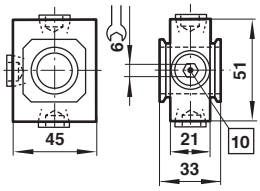

10 Ports 1/4" ISO G/PTF plugged

Pipe adapter

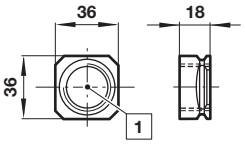

1 Main ports 3/8", 1/2" or 3/4" ISO G/PTF

Our policy is one of continued research and development. We therefore reserve the right to amend, without notice, the specifications given in this document. (1998 - 8070b) © 2015 Norgren Inc.

Shut-off valves

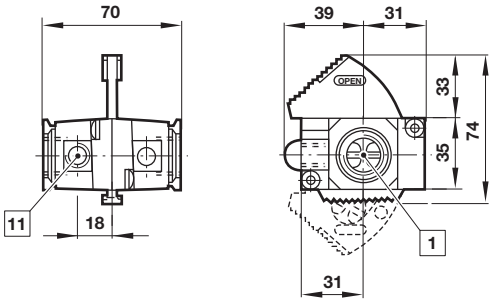

1 Main ports 3/8", 1/2" or 3/4" ISO G/PTF
11 Exhaust port Rc1/8 at 3/2 valve only

Porting block for pressure switch

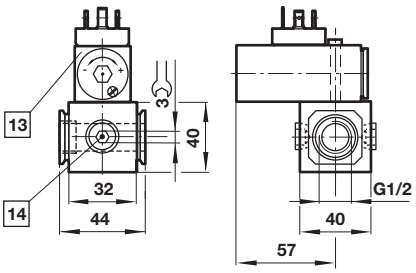

13 Pressure switch is not in scope of delivery
14 Alternative G1/4 ports plugged

Dimensions in mm
Projection/First angle

Warning

These products are intended for use in industrial compressed air systems only. Do not use these products where pressures and temperatures can exceed those listed under **»Technical features/data«**.
Before using these products with fluids other than those specified, for non-industrial applications, life-support systems or other applications not within published specifications, consult IMI Precision Engineering, Norgren GmbH.
Through misuse, age, or malfunction, components used in fluid power systems can fail in various modes.

The system designer is warned to consider the failure modes of all component parts used in fluid power systems and to provide adequate safeguards to prevent personal injury or damage to equipment in the event of such failure.
System designers must provide a warning to end users in the system instructional manual if protection against a failure mode cannot be adequately provided.
System designers and end users are cautioned to review specific warnings found in instruction sheets packed and shipped with these products.

Our policy is one of continued research and development. We therefore reserve the right to amend, without notice, the specifications given in this document. (1998 - 8070b) © 2015 Norgren Inc.