Grid and System Protection Relay

RE - NA003-M64

RE - NA003.COM-M64(*A)

Art. No: 27001xy**K**
Art. No: 27002xy**K** **(*A)**



USERS GUIDE

for SW: 02.18(19).02k

Subject to modifications and errors

(*A) ... refers to the NA003.COM
equipped with a serial interface.
It is only available with this interface!

Table of content

1 Safety 5
1.1 Intended use 5
1.2 Safety advice 5
1.3 Qualified electrician 6
2 Installation and connection 6
2.1 Dimensions and operating elements 6
2.2 Back-up fuse of the supply voltage 7
2.3 Terminal allocation 7
2.4 Installation on top-hat rail according to EN 60715 7
2.5 Circuit diagram 1 (general, without activities for FRT) 8
2.6 Circuit diagram 2 (General, with FRT behavior) 9
2.7 Circuit diagram 3 (CEI 0-21) 10
2.8 Circuit diagram 4 (C10/11) 11
3 Function 12
3.1 Features 12
3.2 Commissioning 12
3.3 Functional description 12
3.4 Protection functions / comparators 14
3.4.1 Voltage monitoring 14
3.4.2 Frequency monitoring 15
3.4.3 Phase shift monitoring 15
3.5 Loss Of Mains (Microgrid) detection 16
3.5.1 Loss Of Mains (Microgrid) detection via voltage measurement 16
3.5.2 Loss Of Mains (Microgrid) detection via RoCoF 16
3.5.3 Loss Of Mains (Microgrid) detection via vector shift 16
3.6 Test function 16
3.7 Digital inputs 16
3.8 Output relays R1, R2 and R3 17
3.9 Error 17
3.9.1 Measurement error 17
3.9.2 System error 17
3.9.3 Error memory (LOG) 18
3.10 Novelties concerning country-specific parameter sets 19
3.10.1 VDE-AR-N 4105:2018 19
3.10.2 C10/11:2021 20
3.10.3 EN50549-1/2:2019 (default Netherlands) 21
3.10.4 OPEN_SETUP 21
3.11 Modbus interface (*A) 22
3.11.1 Basic data Modbus interface 22

3.11.2 Basic data Modbus interface 22
3.11.3 Software Manual 23
3.11.4 Connecting the Modbus Interface with USB-to-RS485 Adapter 23
4 Operation and commissioning 24
Initial commissioning 24
4.1 Menu navigation 24
4.1.1 Level 0 24
4.1.2 Level 1 24
4.1.3 Level 2 25
4.1.4 Level 3 25
4.1.5 Level 4 25
4.1.6 Level 5 26
4.2 Operating menu structure 27
4.3 Lead seal 28
4.4 Use cases 28
4.4.1 Use of voltage transformers in medium power mains (OVE TOR R25, OOE TOR R25) 28
4.4.2 FRT (Fault Ride Through) capability of generators: 29
4.4.3 Self retention for remote shutdown with manual reset 31
4.4.4 Connection of a load management device for power reduction 0% 31
4.5 Supply circuit 32
4.6 Measuring circuit 32
4.7 Measuring ranges 32
4.8 Digital inputs 32
4.9 Output circuit 33
4.10 Accuracy 33
4.11 Insulation data 33
4.12 Environmental conditions 33
4.13 Electrical connection 34
4.14 Sealing wire 34
4.15 Protection class 34
4.16 Mechanical resilience 34
5 Settings of the implemented parameter sets 35
5.1.1 Connection Modes 35
5.1.2 Units 35
5.1.3 Functional safety 35
5.1.4 Operational mode 35
5.1.5 Thresholds 35
5.1.6 Times 36
5.1.7 Auxiliary contact 36
5.1.8 Ranges 36
6 Safety concept 37

7 Naomi – Onlineservice 39
8 Glossary 40
9 Standards and Norms available 41
10 APPENDIX (Parameters of the implemented standards in detail) 46

1 Safety



Caution! Never work when voltage is applied.
This poses a life-threatening risk! Never use the device if there is obvious damage!
Use only by trained specialist personnel!



Professional product!
This product requires special expertise for the installation!



This device is subject to the Waste Electrical Equipment Regulation (WEEE) and may not be disposed of with normal domestic waste. The device is made of materials that can be recycled by specialized recycling companies. The device must be disposed of according to the national electronic scrap regulations.

1.1 Intended use

The TELE NA003 serves as grid and system protection for supplying cogeneration units, wind power stations, hydroelectric power plants, and photovoltaic systems.
In the event of a power failure or a fault in the grid of the energy supply company, private small power plants must immediately be isolated from the public grid to prevent accidental infeed. For one, maintenance personnel could be endangered without immediate grid separation, and secondly, consumers could be exposed to impermissible voltages and frequencies.

In case the grid operator requires threshold values that deviate from the standards, it is possible in part to set some of the threshold values outside of the standard defined range.
Outside of this range the device is no longer in compliance with standards and the corresponding certificates lose their validity. This status is shown on the display by the identifier "ncnf." Settings outside of this range are therefore within the operator's scope of responsibility and/or the acceptance authority of the system.

The NA003, especially the NA003.com(*A) with serial interface can be set with a computer only because further national standards mandatoried by the local authorities can be read online, only. So, the manual can be downloaded online at www.tele-online.com.

1.2 Safety advice

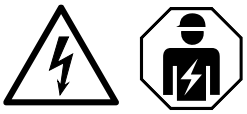

Danger! Never carry out work on live parts! Danger of fatal injury! The product must not be used in case of obvious damage! To be installed by qualified and authorized personnel only!



In General: Strictly and always follow safety advice and warnings!
Do not use this product in case of obvious damage!

The device was developed, produced and tested in accordance to the latest industry standards.
Nevertheless, improper handling or use can endanger humans and machines.
Protection against impairment: The device must be used as prescribed by the manufacturer.
Failure to observe these instructions may result in personal injury, property damage, or economic loss.
Please use the device only in accordance with the installation and operating instructions. Check for secure assembly and good condition. Moreover, the rules and regulations on accident prevention applicable to the place of use must be strictly followed.

• Eliminate all faults immediately which may endanger safety!

• Do not make any unauthorized changes and only use replacement parts and optional accessories purchased from or recommended by TELE!
• In case of obvious damage, the device must be checked and replaced if necessary!
• Country specific regulations have to be considered in any case!
• If required by national standards, the NA003 has to be protected against unauthorized changes by password and/or sealing!

1.3 Qualified electrician

A qualified electrician can independently recognize and prevent dangers from electricity. Requirements for this are:

- Knowledge of electrical engineering
- Experience in electrical work
- Knowledge and work experience with the corresponding system or similar systems (system type)
- Knowledge of the hazards and countermeasures
- The ability to recognize whether safety is provided during the performance of work

Qualified electricians are specially trained and know the relevant standards and regulations for the work environment in which they are active. The regulations of the corresponding country apply.

2 Installation and connection

2.1 Dimensions and operating elements

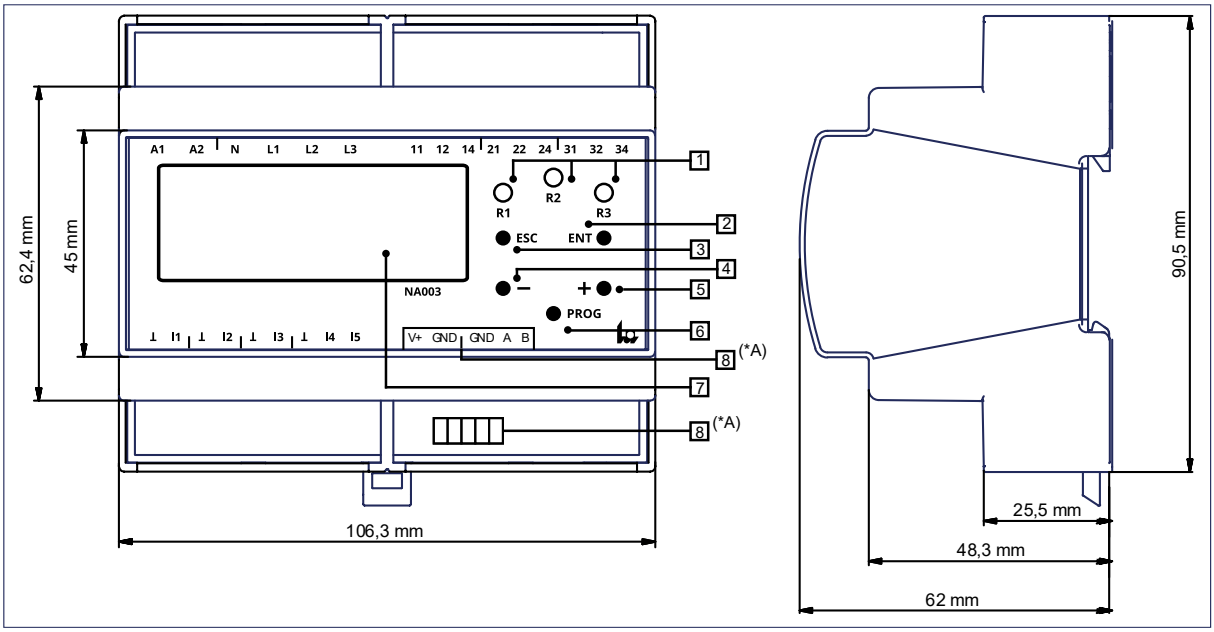

*Figure 1: NA003.COM(*A) Key notes and dimensions*

Legend	Labeling	Type	Function
1	R1, R2, R3	LED (yellow)	Output relay status display
2	ENT	Button	ENTER, input confirmation, next level
3	ESC	Button	ESCAPE, input rejection, back a level, Test
4	-	Button	Parameter setting, display change
5	+	Button	Parameter setting, display change
6	PROG	Button (can be sealed)	PROGRAM, programming
7		LCD-display 4x20 characters	Display
8(*A)		Modbus interface (*A)	For serial communication via Modbus

2.2 Back-up fuse of the supply voltage

The supply and measuring voltages of all system components are to be secured with back-up fuses. The back-up fuses are to be dimensioned according to the conductor cross-section used.
We recommend securing the output relay against the danger of short-circuiting with a 5A fast-acting fuse!

2.3 Terminal allocation

A1, A2	Supply circuit	DC: 24V AC: 110 - 230V A1: L (+) A2: N (-)
L1, L2, L3, N	Measuring circuit	U_N: 3x400V AC
11, 12, 14	Output relay channel A (changeover contact) Status display through yellow LED R1	Contact output (isolated) 11: Root 12: Normally closed contact (n.c.) 14: Normally open contact (n.o.)
21, 22, 24	Output relay channel B (changeover contact) Status display through yellow LED R2	Contact output (isolated) 21: Root 22: Normally closed contact (n.c.) 24: Normally open contact (n.o.)
31, 32, 34	Output relay R3 (changeover contact) Status display through yellow LED R3	Contact output (isolated) 31: Root 32: Normally closed contact (n.c.) 34: Normally open contact (n.o.)
I1, ⊥	Digital input 1 (feedback contact of contactor A)	Contact input (24V/5mA) Input active: when I1 and ⊥ connected (configurable)
I2, ⊥	Digital input 2 (feedback contact of contactor B)	Contact input (24V/5mA) Input active: when I2 and ⊥ connected (configurable) Not applicable for all country-specific standards in which no functional safety is required!
I3, ⊥	Digital input 3 (remote shutdown)	Contact input (24V/5mA) Input active: I3 and ⊥ connected (configurable)
I4, I5, ⊥	Digital input 4 and 5 (Switchover to narrower frequency window)	For CEI 0-21 and C10/11 Contact input (24V/5mA) Input active: when I4 resp. I5 and ⊥ connected
V+, GND (*A)	Modbus interface RS485 - Supply	+24Vd.c. ⎓ Supply. Must be connected!
GND, A, B (*A)	Modbus interface RS485 - Communication	Modbus Data interface. *Both Modbus GND are internally connected*

2.4 Installation on top-hat rail according to EN 60715

Latch the mounting clip on the reverse of the device to the top-hat rail so that a safe and secure fit is ensured.

2.5 Circuit diagram 1 (general, without activities for FRT)

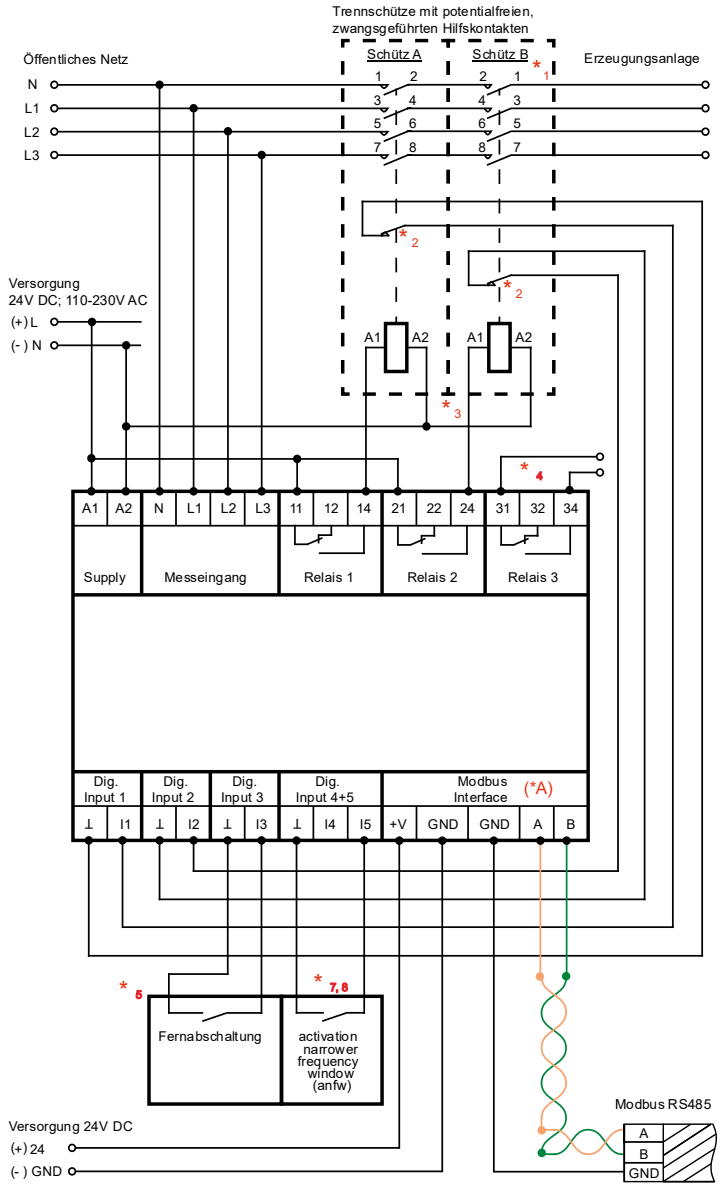

Figure 2: Circuit diagram 1 (general without FRT application)

In general use for current standards:

OVE TOR R25 NS/MS A/SYNC,
OOE TOR R25 NS/MS A/SYNC
WIEN TOR R25 NS/MS A/SYNC
TIROL TOR NS/MS A/SYNC
BURGENLAND TOR NS/MS A/SYNC
VDE-AR-N 4110:2018-11 *1
G99-1-3 LV:2018 *1
G99-1-3 HV:2018 *1
G98-1-2:2018 *1
EN50549-1:2019 LV *4, *8
EN50549-2:2019 HV *4, *8
EN50438:2013 DK *3
VDE 0126-1-1:2013
Romania ANRE 2021
Bulgaria 2024
AS/NZS 4777.2:2020
NRS 097-2-1:2017
OPEN SETUP *3, *4
EN50549-1/2 FDC11 French
EN50549-1 SWEDEN
ESPANA RD1699
NRS 097-2-1:2024
Renova-srl
VDE 4110 FNN24 >50kW *1
VDE 4110 FNN24 Umr *1

Recertified standards:

EN50438:2013
OVE E 8001-4-712 / E 8101-4-712
VDE 0124-100:2013
TR3 Rev23:2013 *1
AS/NZS 4777.2:2015
G59/3/3:2015 LV *1
G59/3/3:2015 MV *1
G83/2:2012 *1

***1 ...** Contactor B not applicable for all country specific standards in which no functional safety is required!
***2 ...** Auxiliary contact configurable as “n/o”, “n/c” or “disabled”
***3 ...** 1- or 2-channel connection possible and can be configured.
***4 ...** Evaluation, contact error for power generation plants mandatoried for VDE-AR-N 4105:2018-11 and C10-11:2019
***5 ...** Digital contact as normally opened, normally closed, or „disabled“. Default is n.o.
***6 ...** VDE-AR-N 4105:2018-11 FRT (fault ride through) behaviour with buffered isolation contactors.
***7 ...** Parameter switching see connection diagram 3 - CEI 0-21
***8 ...** Parameter switching see connection diagram 4 - C10/11

***A ...** Na003.com serial interface - Modbus RTU with RS485

2.6 Circuit diagram 2 (General, with FRT behavior)

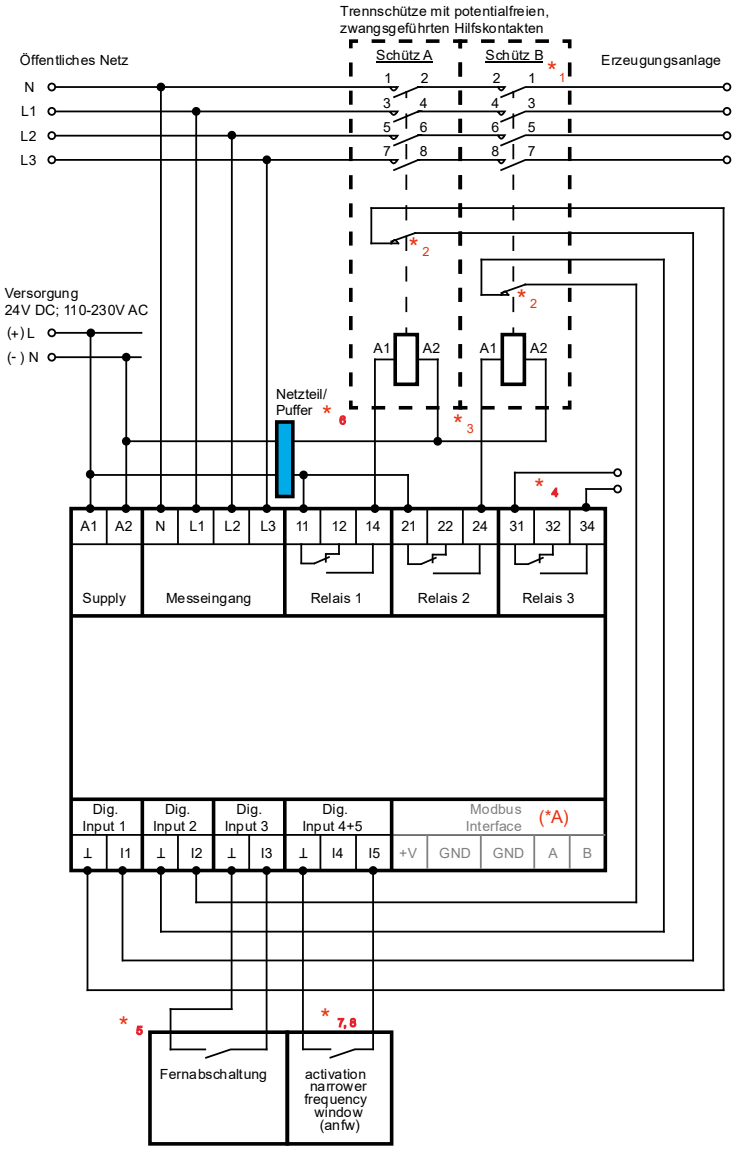

Figure 3: Circuit diagram 2 (with FRT application)

Applies in specific to:

VDE-AR-N 4105:2018-11 (Pn ≤ 50 kW) *1, *4, *6
VDE-AR-N 4105:2018-11 (Pn > 50 kW) *1, *4, *6
VDE-AR-N 4105:2018-11 (Umrichter) *4, *6
VDE 4105 FNN24 Umr*4, *6

***6 FRT - fault ride through**: behaviour with buffered isolation contactors, Power supply / buffer. Isolation contactors and coupling relays, if present, must be buffered for 3s/0.3s in the event of undervoltage (FRT).

Power generation devices into low-voltage networks must help to stabilize the network. Therefore, the isolating contactor must not drop out at a voltage just above U << (0.45 Un) or 0.3s in the event of a voltage interruption due to undervoltage. Only the NA003 switches the contactor off after 3s (U <) or 0.3s (U <<). A power supply / buffer is required.

When using 2 isolating contactors, both must be supplied for 3s. The NA003 has an internal broadband power supply and therefore does not need a buffered control voltage at 230V a.c.
At 24V d.c. supply, there is the need for external buffering.

ATTENTION for signal sequence:
Buffer -> NA003 -> Isolating contactor: The switch-off signal must NOT be delayed!

***1 ...** Contactor B not applicable for all country specific standards in which no functional safety is required!
***2 ...** Auxiliary contact configurable as “n/o”, “n/c” or “disabled”
***3 ...** 1- or 2-channel connection possible and can be configured.
***4 ...** Evaluation, contact error for power generation plants mandatoried for VDE-AR-N 4105:2018-11 and C10-11:2019
***5 ...** Digital contact as normally opened, normally closed, or „disabled“. Default is n.o.
***6 ...** VDE-AR-N 4105:2018-11 FRT (fault ride through) behaviour with buffered isolation contactors.
***7 ...** Parameter switching see connection diagram 3 - CEI 0-21
***8 ...** Parameter switching see connection diagram 4 - C10/11

***A ...** NA003.com serial interface - Modbus RTU with RS485

2.7 Circuit diagram 3 (CEI 0-21)

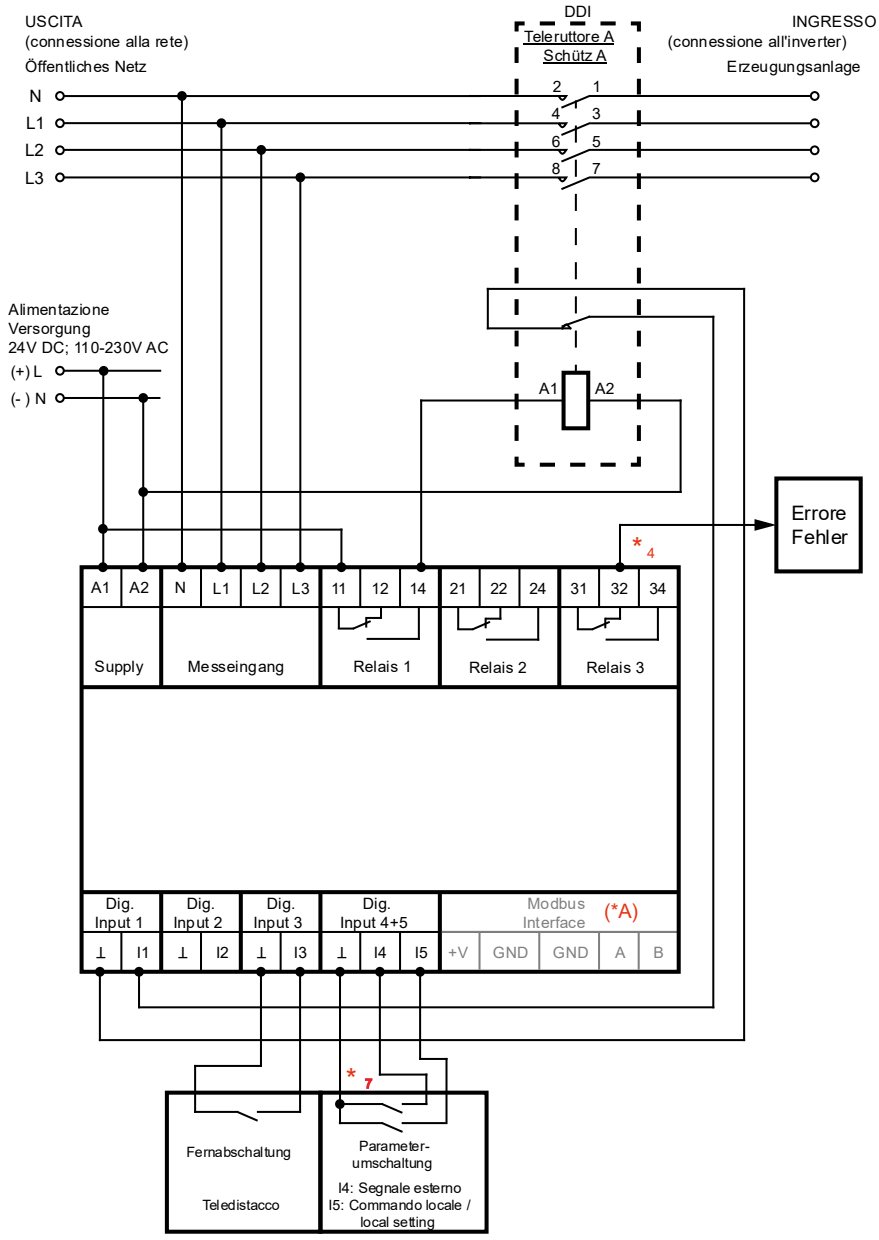

Applies in specific to:

CEI 0-21 ***4, *7**

Figure 4: Circuit diagram 3 (CEI 0-21)

***4 ...** Evaluation, contact error for power generation plants mandatoried for VDE-AR-N 4105:2018-11 and C10-11:2019

***7 ...** Parameter switching (CEI):

definitive mode (Operational mode 0):

I4 inactiv / contact open:	overfrequency 1, underfrequency 1
I4 activ / contact closed:	overfrequency 2, underfrequency 2

transitory mode (Operational mode 1):

I5 active / contact closed:	overfrequency 2, underfrequency 2
I5 inactive / contact open:	overfrequency 3, underfrequency 3

***A ...** Na003.com serial interface - Modbus RTU with RS485

2.8 Circuit diagram 4 (C10/11)

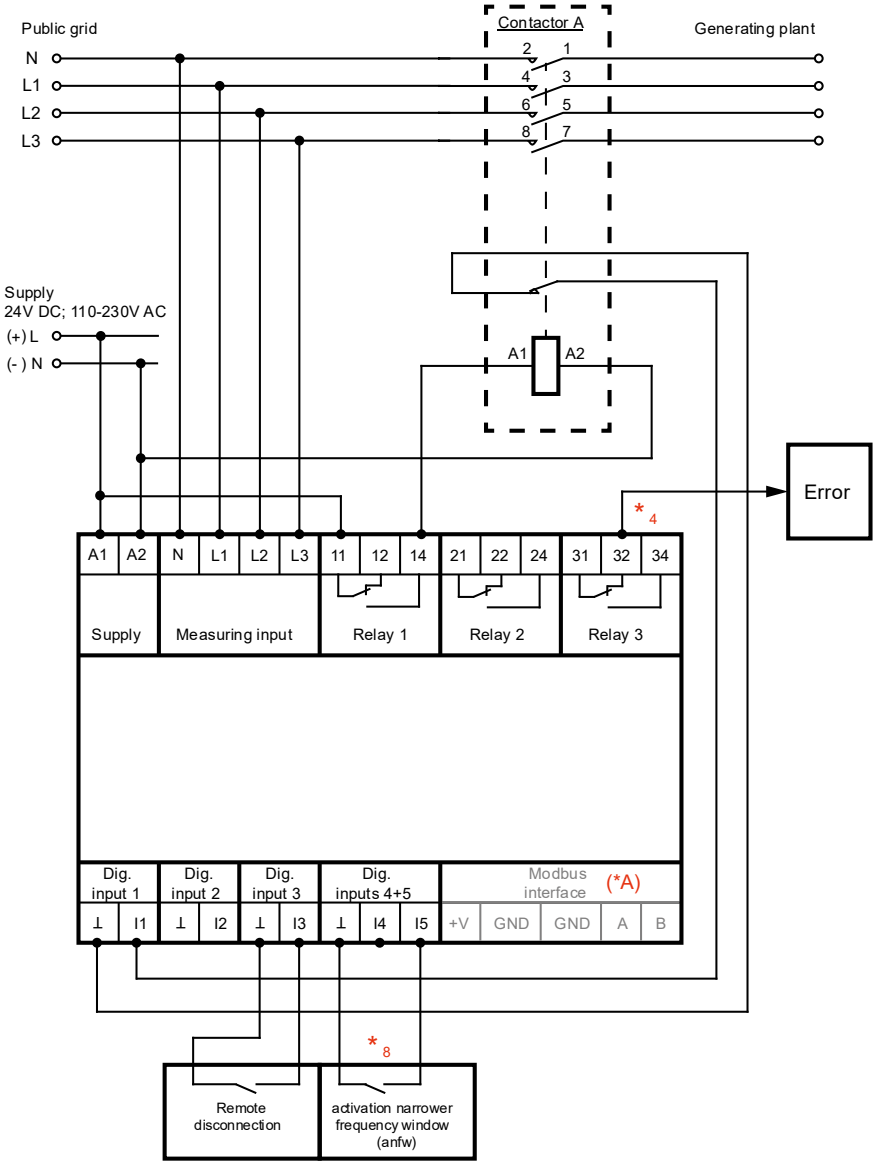

Figure 5: Circuit diagram 4 (C10/11)

Applies in specific to:

C10-11:2019 LV-ASS ***4, *8**
C10-11:2019 HV-ASS ***4, *8**
C10-11:2021 LV-IP ***4, *8**
C10-11:2021 HV-IP ***4, *8**
C10-11:2021 LV-FL ***4, *8**
C10-11:2021 LV-OR ***4, *8**

Recertified standards:

C10-11:2012 LV ***4**
C10-11:2012 MV ***4**
C10-11:2019 LV ***4, *8**
C10-11:2019 HV ***4, *8**

***4 ...** Evaluation, contact error for power generation plants mandatoried for VDE-AR-N 4105:2018-11 and C10-11:2019

***8 ...** Parameter switching (C10/11):

I5 inactive / contact opened: Overfrequency 1, Underfrequency 1
I5 active / contact closed: Overfrequency 2, Underfrequency 2 (narrower frequency window) (based on local voltage criteria / local setting)

***A ...** NA003.com serial interface - Modbus RTU with RS485

3 Function

3.1 Features

- Simple implementation through pre-defined setups for country-specific standards and guidelines with parameters that can be set within a wide range.
- Wide nominal voltage and nominal frequency range, configurable nominal voltage
- Protection functions: U<<, U<, U>, U>>, U_{10min}, f<, f>, f<<, f>>
- Additional "Open setup" for free, practically unlimited parametrization in the field
- Single-fault tolerance
- Cyclical self-test
- Monitoring of the connected section switch
- Remote shutdown
- Loss of mains detection (RoCoF, PShift, phase voltage)
- Test function with the determination of the turn-off time of the connected isolated contactors
- Monitoring of 1- and 3- phase grids for low and medium voltage grids
- Error memory with a timestamp (50 entries)
- Password protection and ability to seal
- Random turn-off thresholds and turn-on times for non-controllable energy producers (e.g. CHP)
- Detection of the symmetrical component “Zero Sequence” in the 3-phase network (U_{zero})
- Switching to different frequency bands (narrower frequency window)
- FRT (fault ride through) capability
- Configuration service and individual test protocols
- Serial connection via Modbus interface (*A)

3.2 Commissioning

After applying the supply voltage to A1 and A2 and in case of (*A) applying the supply voltage for Modbus interface (V+, GND), the start display appears for 5 seconds. The device is delivered without a preselected parameter set. During initial commissioning, the device enters parameter set selection (level 5 - menu item 5.001). Here, the corresponding country-specific parameter set/standard must be selected using +/- and confirmed with ENTER. For more information, see 4.1 Menu navigation.

3.3 Functional description

Depending on the country-specific configuration selected, the device can handle several monitoring functions (protection functions) at the same time.

Unless otherwise stated, the nominal voltage is 230V/400V and the nominal frequency is 50Hz (check menu item 1.010).

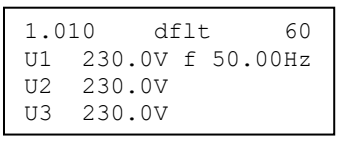

After exceeding or falling below a threshold value, R1 and R2 switch off after a response-delay that is defined especially for each threshold value. During the self-test or when the remote shutdown is activated, R1 and R2 switch off immediately. Only once all monitored parameters are within the permissible limits and the remote shutdown is deactivated, R1 and R2 switch on again after a defined turn-on time.

R1 and R2, together with the connected isolating contactors (A and B), ensure the required mains separation (generating system - public mains) when a protective function is triggered.

The switching actions of the isolating contactors are also monitored by the feedback contacts of the isolating contactors, which are connected to the digital inputs of the NA003-M64, which further increases plant safety.

Make sure that the feedback contacts of the isolating contactors A/B are correctly connected. Menu item 1.040 provides information about the status of contactors A and B (DI1 and DI2). The feedback contacts may have to be re-parameterised to menu item 3.099 (n.c. versus n.o.). Another source of error are the masses of the digital inputs I1 and I2, which are not connected internally and must therefore always be connected externally.

Both relais R1 and R2 LEDs dark means that R1 and R2 are OFF (inoperative):

```
1.040    dflt      60
Toff ---ms
DI1 DI2 DI3 DI4 DI5
 1   1   0   0   0
```

The digital inputs DI1(2) signal a closed feedback contact of the isolating contactors with "1". If n.c. (normally closed) is selected for parameter 3.099, the wiring is correct.

However, if the digital inputs DI1(2) are monitoring "0", an open feedback contact of the contactors as in the following display is recognized.

```
1.040    dflt      60
Toff ---ms
DI1 DI2 DI3 DI4 DI5
 0   0   0   0   0
```

In this case parameter 3.099 must be changed to n.o. (normally open), or the wiring between the isolating contactors A/B and the digital inputs has not been carried out correctly.

Table of parameter 3.099:

Type of contactor of auxiliary contact			**Parameter 3.099 (setting value)**
Contact type	Contact designation	Symbol	
Normally open contact (n.o.)	13/14, 23/24, 33/34, ...		n.o.
Normally closed contact (n.c.)	11/12, 21/22, 31/32, ...	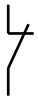	n.c.

The functional description of the Modbus interface is described in chapter 3.11.

3.4 Protection functions / comparators

Depending on the selected parameter set, certain protection functions / comparators are editable.

3.4.1 Voltage monitoring

Line to line 59.S1 59.S2	Overvoltage 1 Overvoltage 2	All 3 phase to phase voltages are monitored according to the set overvoltage thresholds. If the threshold is exceeded, R1 and R2 switch to OFF after the set response delay t_{off}. Line to line monitoring is deactivated in 2-phase (L+N) and 4-phase (L1, L2, L3+N) connection mode!
Line to line 27.S1 27.S2	Undervoltage 1 Undervoltage 2	All 3 phase to phase voltages are monitored according to the undervoltage thresholds set. When falling below the threshold, R1 and R2 switch to OFF after the set response delay t_{off}. Line to line monitoring is deactivated in 2-phase (L+N) and 4-phase (L1, L2, L3+N) connection mode!
Line to Neutral 59.S1 59.S2	Overvoltage 1 Overvoltage 2	All 3 phase-to-neutral voltages are monitored according to the overvoltage thresholds set! If the threshold is exceeded, R1 and R2 switch to OFF after the set response delay t_{off}. Exception: In 2-phase (L+N) connection mode, overvoltage monitoring only takes place between L1 and N! Line to Neutral monitoring is deactivated in 3-phase (L1, L2, L3) connection mode!
Line to Neutral 27.S1 27.S2	Undervoltage 1 Undervoltage 2	All 3 phase-to-neutral voltages are monitored according to the undervoltage thresholds set! When falling below the threshold, R1 and R2 switch to OFF after the set response delay t_{off}. Exception: In 2-phase (L+N) connection mode, overvoltage monitoring only takes place between L1 and N! Line to Neutral monitoring is deactivated in 3-phase (L1, L2, L3) connection mode!
Average 59-AV	Overvoltage	The calculated 10-minutes average is monitored according to the thresholds set for the slow voltage increase protection. If the threshold is exceeded, R1 and R2 switch to OFF after the set response delay t_{off}. In 2-phase coupling mode: L-N In 3-phase coupling mode: L1-L2-L3 In 4-phase coupling mode: L1-N; L2-N; L3-N
U (Zero Sequence) Uzero Line to Neutral Line to line 59V0	Overvoltage	All 3 line-to-neutral voltages are added with magnitude and phase position. This resulting voltage (zero sequence) is determined in terms of magnitude to the neutral conductor and subsequently divided by three. If the threshold is exceeded, R1 and R2 switch to OFF after the set response delay t_{off}. The zero sequence is only activated in the 4-phase (LN +LL) connection mode!
U (resulting) Ures Line to Neutral Line to line	Overvoltage	Activation of the narrower frequency window when the threshold of 3 x Zero Sequence is exceeded after the set response delay t_{off}. Ures is only activated in the 4-phase (LN +LL) connection mode!

U (**a**ctivation **n**arrower **f**requency **w**indow) U**anfw** Line to Neutral	Undervoltage	All 3 line-to-neutral voltages are monitored according to the set undervoltage thresholds. If the value falls below the threshold, the **n**arrower **f**requency **w**indow is activated after the set response delay t_{off}.

3.4.2 Frequency monitoring

Overfrequency 1 Overfrequency 2 Overfrequency 3 Overfrequency 4 81O.S1, 81O.S2, 81O.S3, 81O.S4	The frequency of the 3 phase-to-neutral voltages is monitored according to the overvoltage thresholds set. If the threshold is exceeded, R1 and R2 switch to OFF after the set response delay t_{off}. Exception: in 2-wire mode only U L1-N is monitored
Underfrequency 1 Underfrequency 2 Underfrequency 3 Underfrequency 4 81U.S1, 81U.S2, 81U.S3, 81U.S4	The frequencies of the 3 phase-to-neutral voltages are monitored according to the under-frequency thresholds set. When falling below the threshold, R1 and R2 switch to OFF after the set response delay t_{off}. Exception: in 2-wire mode only U L1-N is monitored
Random over frequency	The frequency of the 3 phase-to-neutral voltages is monitored according to the parameters set (random max. frequency). If the threshold is exceeded, R1 and R2 switch to OFF after the set response delay t_{off}. Exception: in 2-wire mode only U L1-N is monitored
Frequency monitoring undervoltage LL Frequency monitoring undervoltage LN	Depending on the connection mode (2-, 3-, 4-wire) falling below the set threshold leads to the deactivation of the frequency monitoring.
RoCoF 81R	The rate of change of frequency of the 3 phase-to-neutral voltages are monitored according to the parameters set. If the threshold is exceeded, R1 and R2 switch to OFF after the set response delay t_{off}. Exception: in 2-wire mode only U L1-N is monitored

3.4.3 Phase shift monitoring

Phase Shift 78	The phase shift behavior of the 3 phase-to-neutral voltages is monitored according to the parameters set. If the threshold is exceeded, R1 and R2 switch to OFF after the set response delay t_{off}. Exception: in 2-wire mode only U L1-N is monitored

3.5 Loss Of Mains (Microgrid) detection

A Loss of Mains or Microgrid is a locally defined electricity main that consists of only one or a few electric generators, supplying only a small area and is no longer connected to other electric grids.

3.5.1 Loss Of Mains (Microgrid) detection via voltage measurement

In this process, a microgrid is detected via 3-phase voltage monitoring (line-to-line).

3.5.2 Loss Of Mains (Microgrid) detection via RoCoF

In this process, a microgrid is detected via rate of change of frequency. This measurement is based on frequency measurements and triggers in the event of lasting frequency changes over multiple periods. The df/dt limit is specified and set in mHz/s.

3.5.3 Loss Of Mains (Microgrid) detection via vector shift

In this procedure, a phase or vector shift is detected via time measurements of the half-waves and the comparison with previous measurements. A vector jump can occur due to a sudden load change or shortcuts in the superordinate mains. The limit is specified and set in degrees (0,1 etc.).

3.6 Test function

The test function can be activated in two different ways:

- Pressing the ESC key in any display of menu level 1
- Pressing the ENT key in menu item 1.050

Both output-relays R1 and R2 are switched off activating the test function and the turn-on time begins to run.

As with every turn-off, the turn-off time in the test function is determined. The last turn-off time can be read out in menu item 1.040 (Toff).

3.7 Digital inputs

The actual state of the digital inputs can be seen with menu item 1.040.

The different ⊥ for the digital inputs are not connected to each other internally, so they all must be connected individually when used.

Digital inputs 1 and 2 (each with ⊥) serve as feedback contacts of both isolating contactors A and B. They are driven via the auxiliary contact of the isolation contactors. Here, the auxiliary contact must be connected as normally opened or normally closed and the digital inputs must be configured accordingly in menu item 3.099 of the device. The different ⊥ for the digital inputs are internally not connected to each other, so they must be connected individually when used.

The digital input 3 (I3 and ⊥) serves for remote shutdown. Menu item .114 (I3 STOP) is by default n.o. (normally open). In this case R1 and R2 switch off by bridging I3 with ⊥. Changing menu item .114 to n.c. (normally closed), I3 must be bridged with ⊥ for normal operation (R1 and R2 switched on). By opening I3 from ⊥, R1 and R2 are switched off and thus also the connected contactors A and B. Disabling .114 (dis.) no remote shutdown can be performed.

Both digital inputs 4 and 5 are used for parameter switching for Italian standard CEI 0-21. Digital input 5 is used to activate the narrower frequency window for the Belgian and European parameter sets C10/11:2021 and EN50549-1/2:2019.

3.8 Output relays R1, R2 and R3

The two output relays R1 and R2 trigger the isolating contactors/coupling switches. If the public mains is measured and found to be OK by the NA003-M64, the generating unit may supply in. Therefore R1 and R2 switch state to ON (LED R1 and LED R2 light up). The connected isolating contactors at 11-14 (21-24) are actuated and connect the generating unit to the power grid.
If measured line-to-neutral/line-to-line voltages, mains frequency (or RoCoF, Pshift, Uzero) move outside their defined thresholds, a protection function is activated. In this case R1 and R2 switch to OFF, which opens the isolating contactors 11-14 (21-24), thus disconnecting the generating unit from the public mains.

The output relay R3 is handled country-specific. This allows error states (violations of the protective function, incorrectly configured/wired feedback contacts) to be evaluated. Depending on the error case for which R3 is configured, it switches state to ON in the event of an error (LED R3 lights up). An error occurs if, for example there is an overvoltage error or the feedback contacts are not connected correctly.

3.9 Error

Latest errors are displayed in level "1.060 Error," the display of the error memory is located in level 2. There is a difference between Measurement errors and system errors as follows:
If you are in the error window and no letter and/or number code is visible, the device has no error!

3.9.1 Measurement error

```
1.060   Error
M: UΔ UY Ū f Δf ΔΦ C
S: T0123456789ABCDEF
               ENT ->
```

Only the current present error is shown here!

Error types:

UΔ	Phase to phase voltage error (under or overvoltage)
UY	Phase-to-neutral voltage error (under or overvoltage, Zero Sequence)
Ū	10-minute average voltage error
f	Frequency error (under or over frequency)
Δf	Frequency ramp error (RoCoF)
ΔΦ	Phase shift error (PShift)
C	Feedback contact error – Contactor falsely closed
c	Feedback contact error – Contactor falsely opened
	No error visible? The device is working properly

3.9.2 System error

```
1.060   Error
M: UΔ UY Ū f Δf ΔΦ C
S: T0123456789ABCDEF
               ENT ->
```

Error types:

T	Remote shutdown active
0-9, A-F	If this error appears permanently, please contact our technical support.

System error entries are found in the error memory when the unit is delivered. These are caused by the factory due to final tests of the device, in which these errors are induced on purpose. As the error memory cannot be deleted, these entries do not represent a device error and can simply be ignored.

Further information for system errors
T .. remote disconnection
0 .. CODEID
1 .. CCODEVERS
2 .. CODECRC
3 .. FLASHCRC
4 .. EEPROMCRC
5 .. LOGICVERS
6 .. LOGICCRC
7 .. reserved
8 .. POWER6V
9 .. POWERDIGINP
A .. MEASCOMPAB
B .. PWDINACTIVE
C .. INTERCOM1
D .. reserved
E .. reserved
F .. reserved

3.9.3 Error memory (LOG)

The error memory (for max. 50 LOGs) is displayed in level 2.
In the error memory, both the occurrence and the disappearance of each error are stored with a time stamp. Entries without an error code is therefore not a malfunction.

```
2.0nn   Error
M: UΔ UY Ũ f Δf ΔΦ C
S: T0123456789ABCDEF
t: 9999d 15h 03m 01s
```

nn ... The number of the entry in the error memory
t ... Timestamp: duration since occurrence in days/hours/minutes/seconds

3.10 Novelties concerning country-specific parameter sets

3.10.1 VDE-AR-N 4105:2018

For the 3 parameter sets of VDE-AR-N 4105 (ID:311,312,313), the following applies for commissioning:

When commissioning, make sure that only one coupling switch (at R1) is to be used. VDE-AR-N 4105 for inverters is an exception - here, 2 coupling switches (at R1 and R2) must still be used.
Furthermore, the feedback contact(s) must be connected to the digital inputs I1(2) and ⊥provided for this purpose. Finally, parameter 3.099 determines whether the feedback contact(s) are normally closed (n.c.) or normally open (n.o.).
An Error C (Contact) appears on the display if this has not been taken into account. NA003 must not switch on the output relays R1 and R2 for VDE-AR-N 4105 during Error C as long as the feedback contacts are not correctly connected and parameterised.

Contact Error-Reset:

If U_N 3x400V AC is properly applied, a reset can only be performed by pressing Esc (level 1.010) or Ent (level 1.050). The contact error is thereby deleted and the output relays R1 and R2) pick up after the switch-on time has elapsed.
An existing contact error can also be reported to the generating unit via R3.
In this context, we would like to refer to chapter 3.7 Test function (determining the tripping time of the coupling switch).

New parameter T ConDelOn:

By means of synchronising devices or circuit breakers, it is permitted that after the release by the NA protective relay, the coupling contactor(s) are only switched on with a delay. Therefore, the feedback from the feedback contact is also delayed. The permissible response delay is defined with the **parameter 3.110. T ConDelOn**. In the default setting, this time is parameterised with **100ms** and can be set up to a maximum of 300,000ms (5min). Conformity is guaranteed up to 10.000ms.

Criteria for used coupling switch:
With the set 100ms trigger time for the different protective functions, the maximum trigger time of the NA003-M64 is 119ms with the **German parameter sets**. To ensure the total tripping time of ≤200ms (NA003-M64 + coupling switch), **the coupling switch** used must be able to trip **within** 81ms.

Password protection:

With regard to VDE-AR-N 4105, the appliances are provided with fixed password protection upon delivery. The password is "4105". The commissioning engineer is requested to change the password immediately for security reasons (see 5.2.5)

3.10.2 C10/11:2021

Zero Sequence protection function:
The detection of the zero sequence (Uzero) in the three-phase system forms a further supplement to the protection functions. Zero sequence can be used, for example, to detect short circuits in the superordinate medium power grid. For this purpose, the three line-to-neutral voltages L1, L2 and L3, which are normally shifted by 120°, both the magnitude and the phase position are added to each other. The magnitude of the voltage difference (without angle) to the neutral conductor is determined and divided by three.
If all line-to-neutral voltages have the same magnitude and are shifted exactly 120° to each other, the zero sequence is 0VAC.
In the currently valid version of the C10/11, the threshold value for zero sequence is defined with 20% Un (46VAC). If this limit is exceeded for >1.5s, R1 and R2 switch off and do not switch on again after the Ton delay has elapsed until the zero sequence falls below 15% Un (34.5VAC). The corresponding parameters can be found in parameter set ID:603 from 3.115 to 3.118 (see appendix).

Connection Mode 4-wire (LN+LL) is required to determine the zero sequence. This is activated by default in parameter set ID 603 for C10-11:2021 LV-IP and must not be changed by the local mains operator if the Zero Sequence protection function is mandatoried. In parameter set ID 653 for C10-11:2021 HV-IP, the determination of the zero sequence must be individually discussed with the local mains operator and set accordingly.

For error-free detection of the zero sequence, none of the 3 angles (Phi1, Phi2 or Phi3) between L1, L2 and L3 must not exceed >180°. Furthermore, the direction of rotation of the 3 phases L1->L2->L3 must be strictly ensured. For this purpose, L1, L2 and L3 of the power grid must be connect parallel to the phases L1, L2 and L3 of the NA003-M64 in this order. To detect the zero sequence, the neutral conductor must be connected (also due to Connection Mode 4-wire (LN+LL)).

Activation of narrower frequency window:
This is based on 2 criteria of locally prevailing voltages in Microgrids. In the event of a response, a narrower frequency window <49.7Hz and >50.3Hz (500ms) is monitored in addition to the normal frequency monitoring ≤47.5Hz and ≥51.5Hz (<100ms), thus forming a further protection function for shut down R1 and R2 for mains disconnection.

1. Criterion: Activation of the narrower frequency window on exceeding Ures-anfw > 5% Un (Ures-anfw = 3 * Uzero). Related parameters for deactivation, for example, starting from 3.119 to 3.122.
   With this criterion, it should be noted that even the smallest changes in one of the line-to-neutral voltages <218.5VAC (for Un = 230VAC) or an angular change in one of the line-to-neutral voltages of >2.87° result in the activation of the narrower frequency window.

2. Criterion: Activation of the narrower frequency window when one of the line-to-neutral voltages is below 85%. This criterion replaces the measurement of the rotating and counterrotating symmetrical components of the 3-phase system. Related parameters for deactivation, for example Starting with 3.123 to 3.126.

Another possibility to activate the narrower frequency window is to bridge the digital input I5 with ⊥ in order to be able to connect further measurement options here, as recommended in EN50549-1:2019 + AC:2019 (see connection diagram 4).

Important!
The settings for activating the narrower frequency window (3.062 to 3.069 and 3.119 to 3.126) must be agreed and documented with the local network operator.

3.10.3 EN50549-1/2:2019 (default Netherlands)

For the European EN50549-1/2 parameter set, the same requirements apply for the activation of the narrower frequency window as in chapter 3.10.2. However, the corresponding parameters (3.062 to 3.069 and 3.119 to 3.126) are deactivated and must be parameterized after consultation with the local network operator. Furthermore, the protection function Zero Sequence can also be activated in the parameter sets of EN50549-1/2 as mentioned in 3.10.2.
The default settings in the parameter set are designed for the standard protection functions of the Netherlands.

3.10.4 OPEN_SETUP

Within the parameter set OPEN_SETUP, voltage threshold values for the deactivation of all 3 possible frequency monitoring can now be activated. Activation/deactivation is done with parameter 3.046 for LL measurements and parameter 3.050 for LN measurements. With 3.047 (for LL) or with 3.051 (for LN), the voltage thresholds for deactivating the frequency monitors can be set. In most countries, these are around 20%Un. The hysteresis for the reactivation is automatically defined with 1%.
With OPEN_SETUP, the Zero Sequence can also be activated as the activation of narrower frequency band.

3.11 Modbus interface (*A)

The add-on NA003.COM implements a Modbus RTU (RS485 standard) interface.
It is possible to read and to overwrite values like voltages, frequencies, parameter sets, etc.

3.11.1 Basic data Modbus interface

Type	Modbus RTU/RS485, 5V Transceiver
Supply	24V d.c. ⎓
Tolerance of the supply voltage	± 15%
Nominal consumption interface (ca.)	0,2W @ 24V d.c. ⎓
Terminals	V+, GND, GND, A, B
Baudrate	9k6 = 9600 baud / 19k2 = 19200 baud (Default: 19200 baud)
Startbit	1
Data length	8 bits
Parity bit	E - even / O - odd / N - none (8N1 none conform)
Number of stopbits	1 or 2
Modbus register / configuration	See software manual (website: www.tele.com)
Protection against electrical shock	Protective separation by reinforced insulation across RS485 interface and Sensor Inputs.
Cable management communication:	Must be installed in-building and with no connection to earth. Length of cables <10m.
Terminals:	Push-IN terminals, 0.5mm2, stripping length 6mm, el. load capacity 63V / 6A, for release: Screwdriver slot 0.4 x 2mm.
Isolation:	Secure separation

3.11.2 Basic data Modbus interface

The Modbus interface with the components to be connected in Figure 6. Modbus RS485 standard including RTU cable and 5V transceiver are necessary. We recommend a USB-to-RS485 adapter at this point, as shown in Figure 7, to establish a stable serial connection between the slave (NA003.COM) and the master (user PC, etc.).

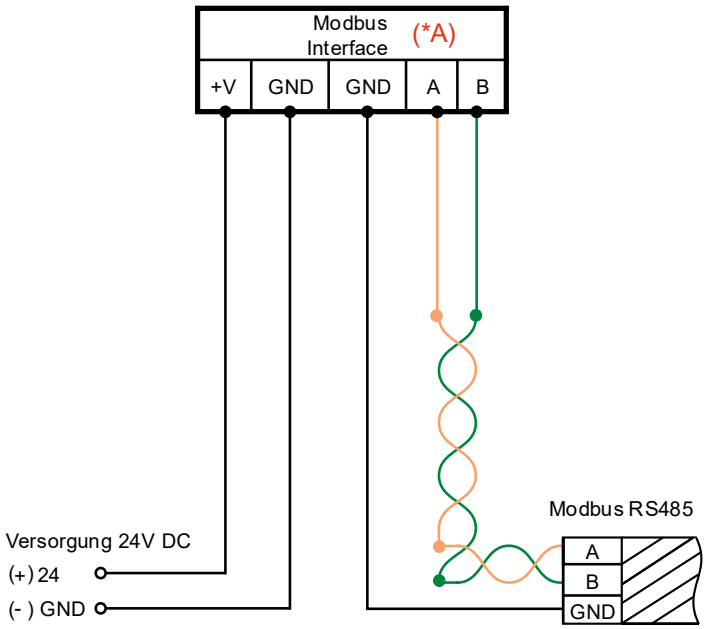

Figure 6: Connection diagram Modbus interface RS485 standard



Figure 7: USB-to-RS485 adapter, can be ordered at www.tele-online.com with the designation S-USB485

3.11.3 Software Manual

All relevant information about software can be found in the document "Software Manual NA003.COM".

In the document you will find all Modbus register entries, the adapted menu structure, and the handling with "Modbus Poll ©", which we recommend as Modbus configuration software, as Modbus Poll was also used in the use case in the software manual.

The Modbus Poll program is available online and can be downloaded free on:
https://www.modbustools.com/

3.11.4 Connecting the Modbus Interface with USB-to-RS485 Adapter

The Modbus interface is connected as shown in Figure 8.

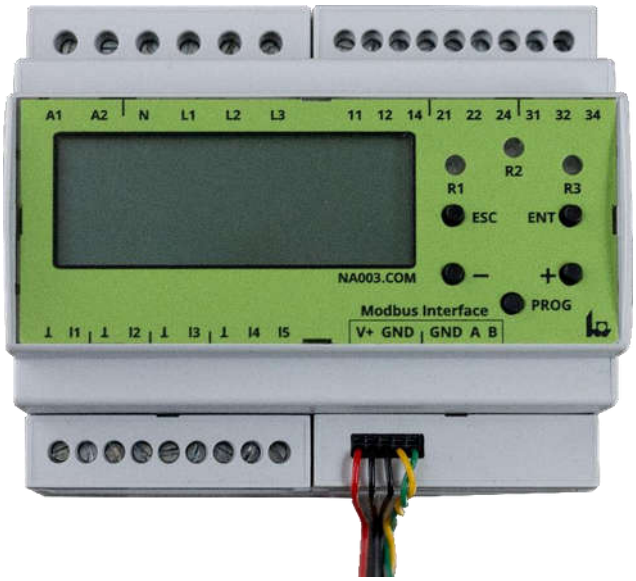

Figure 8: Exemplary connection Modbus interface NA003.COM

4 Operation and commissioning

Initial commissioning

The device is delivered without a pre-configured country specific parameter set. During initial commissioning, the device will prompt to select a parameter set (level 5 - menu item 5.001). Here, the corresponding configuration/standard must be selected via +/- and confirmed with ENTER.

You can find more information in the menu structure.

4.1 Menu navigation

The display unit consists of a 4-line text display with 20 characters per line.
The display has 5 levels. The different displays of the levels can be navigated via + and -.

4.1.1 Level 0

Start display (Display for 5 seconds during power up)
Basic information is displayed here (for example SW-Version and serial number). This display appears after power-up and remains visible for 5 s. Then the display jumps to the first window in level 1.

4.1.2 Level 1

Measurements (Display 1.010-1.032)
Display of the current measurements.

Additionally, it will also be displayed here if the parameter set corresponds to the default configuration (dflt - default = base or factory setting). Was a parameter edited within the normative permissible limit values (edit – edited), or was set outside the normative permissible limit values (ncnf – non conform = does not comply with the regulations or the selected standard).

The expiring timer of Ton delay can also be read out in menu item 1.010 (in seconds).

Navigation +/-. From these displays, pressing the ENT-key takes you to level 3.

Digital inputs and turn-off time (Display 1.040)
Displays the actual states of the digital inputs and the last turn-off time (Toff) of the connected contactors (the larger value for two-channel systems).

Test/Reset (Display 1.050)
A relay test is triggered by pressing the ENT key. In this test, relays A and B turn off and the "reconnection-timer" (turn-on time) begins to run.
Also, a reset event can be carried out with the test/rest function, which allows relay 1/2 to be switched on again after a contact error (C) (required for the three-parameter sets VDE-AR-N 4105). The test/reset event can also be performed by pressing the ESC key in level 1.

Modbus (Display 1.900)[*A)]
Pressing the ENT button opens the Modbus menu structure, which is described in more detail in the software manual.

Error (Display 1.060)
Display of current error:

M	Measurement error
S	System error

Navigation +/-. Access level 2 by pressing the ENT key.

(*A) The Modbus interface is explained in more detail in the attached document “Software Manual NA003.COM”.

4.1.3 Level 2

Error memory
This is where the latest errors are displayed with a timestamp (time since occurrence). The time is only counted when the device is powered. Both positive, as well as negative error flanks, are saved and displayed.

Navigation +/-. From this screen, you can access level 1 via ESC.

4.1.4 Level 3

Parameter display
Here, the parameters that have been visibly switched for the corresponding configuration are displayed.
Navigation +/-. From this screen, you can access level 1 via ESC.
You can access the editing mode of the selected parameter via PROG (can be lead-sealed).

The password query is skipped if the password is "0000" and you will end up directly in editing mode in level 5.
If a valid password has been entered in the last 60 seconds, the password query is skipped and you will end up directly in level 5.
If a password other than "0000" has been defined, you will be asked for the password in level 4.

4.1.5 Level 4

Password input
The currently active digit of the password can be incremented/decremented (0...9) via +/-.
ENT jumps to the next digit of the password entry.
The entered password is checked after pressing ENT in the 4th position.
ESC jumps back to the previous digit of the password entry.
The program goes back to Level 3 when you press ESC at the first digit of the password.

If you have forgotten the password, please contact our technical support and let them know the device ID. You will receive a master password only relevant to your device.

4.1.6 Level 5

Parameter editing
In this level, the parameter previously selected in level 3 can be changed with +/-.
Confirm with ENT or use ESC to discard the change. In both cases, the display jumps to the corresponding parameter in level 3.

Additionally, it will also be displayed here whether the value that was just edited corresponds to the default configuration (dflt - default = base or factory setting) if it was edited within the normative permissible limit values (edit – edited) or is set outside the normative permissible limit values (ncnf – non conform = does not comply with the selected regulation or the selected standard).

Alongside thresholds, times, and modes, the 4 digits of the password also have 1 parameter each.

The current standard is a parameter too. This means that a newly selected standard will be activated by changing this parameter. Therefore, all previous changes will be discarded.

If the already set standard is selected, the standard will be reset to default.

4.2 Operating menu structure

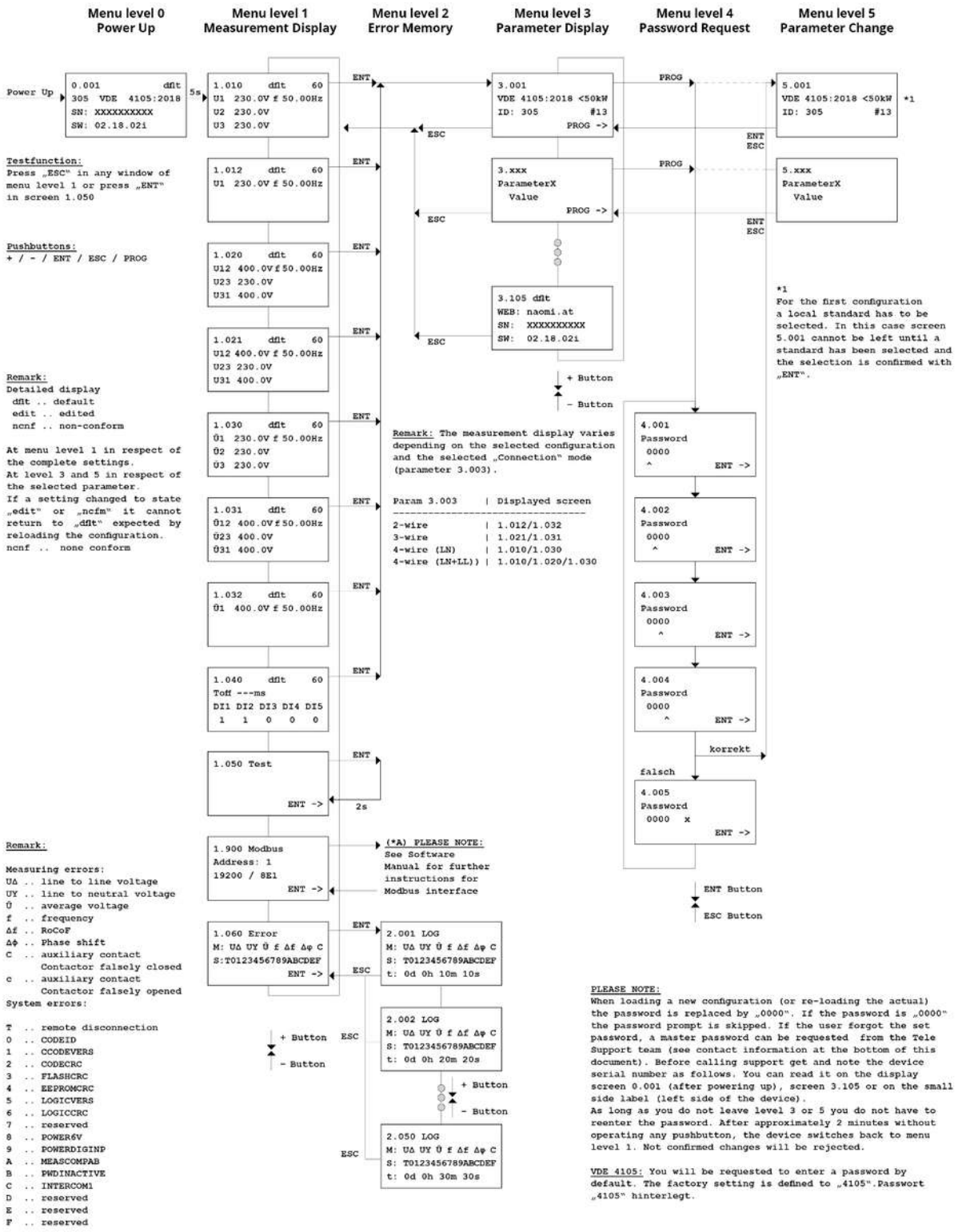

Figure 9: Menu structure

4.3 Lead seal

After commissioning, the device is to be secured against unauthorized changes of the protection-relevant setting parameters via a configurable password! If password protection is not used or if the country-specific regulations or standards demand it, the device is to be lead-sealed!

4.4 Use cases

4.4.1 Use of voltage transformers in medium power mains (OVE TOR R25, OOE TOR R25)

Using Austria as an example, in medium voltage networks a distinction is made between two basic voltage levels:
21kV and [31.7kV for special cases e.g. wind farms] phase to phase voltage.

Use of a 200:1 voltage converter at Uc = 21kV:

1. Select the parameter set **852** (OVE/OOE TOR R25 MS SYNC) for synchronous or **853** (OVE/OOE TOR R25 NS ASYNC) for non-synchronous generating systems (converter).

2. Parameter .005 (setting the nominal voltage ULN/LL nom) to **60.4/105.0V**.
   Mathematically, the value results from 21kV/200 = 105V (the 60.4V stand for the phase to neutral voltages, which are not relevant for medium-voltage applications). The setting options are possible as described with **60.4/105.0V**.

Use of a 200:1 voltage converter at Uc = 31,7kV (e.g. wind farms):

1. Select the parameter set **852** (OVE/OOE TOR R25 MS SYNC) for synchronous or **853** (OVE/OOE TOR R25 NS ASYNC) for non-synchronous generating systems (converter).

2. Parameter .005 (setting the nominal voltage ULN/LL nom) to **91.0/158.1V**.
   Mathematically, the value results from 31.7kV / 200 = 158.5V (the 91.0V stand for the phase to neutral voltages, which are not relevant for medium-voltage applications). The setting options are possible as described with **91.0/158.1V**.

Use of a 300:1 voltage converter at Uc = 31,7kV (e.g. wind farms):

1. Select the parameter set **852** (OVE/OOE TOR R25 MS SYNC) for synchronous or **853** (OVE/OOE TOR R25 NS ASYNC) for non-synchronous generating systems (converter).

2. Parameter .005 (setting the nominal voltage ULN/LL nom) to **60.4/105.0V**.
   Mathematically, the value results from 31.7kV/300 = 105.6V (the 60.4V stand for the phase to neutral voltages, which are not relevant for medium-voltage applications). The setting options are possible as described with **60.4/105.0V**.

In any case, the following applies: All protective functions U>>, U>, U<<, U< automatically adjust to the newly set voltage levels, this means changes only need to be made if they do not meet the requirements of the network operator.

Changing the protective function U> and U>> according to the specifications of the network operator:

In the delivery state (default), these thresholds for U>off are 1.06xUc (106%) and for U>>off 1.1xUc (110%). If the network operator requests settings for U> off for example 1.04xUc (104%) and U>>off for example 1.15xUc (115%), both parameters .011 and .027 must be adjusted. If there are also different specifications for the undervoltage thresholds, parameters .015 (U<off) and .031 (U<< off) must also be adjusted.

Note: In low-voltage networks, the nominal voltage is designated Un and in medium voltage networks Uc.

4.4.2 FRT (Fault Ride Through) capability of generators:

The FRT capability must be considered separately for the different components of power generation equipment. The FRT capability of isolating contactors is described in chapter 2.6. The installer of the power generation system must ensure that sufficient buffering is available for the isolating contactors.
The installer of the power generation plant must also ensure that the requirements from the FRT (different requirements between countries) and the protection settings for undervoltage (U</U<< and Time OFF) do not affect each other.
If the NA003 (A1/A2) is supplied by the measuring circuit (not supplied separately from the measuring circuit), it can be guaranteed that the following FRT requirements from TOR 1.1 and VDE-AR-N 4105: 2018 can be run through without any problems (even at short intervals) while the output relays R1/R2 do not switch off erroneously due to the internal power supply unit.

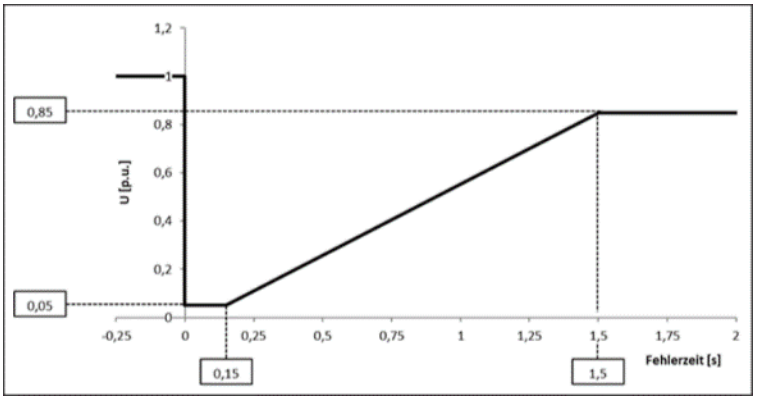

(FRT-profile of asynchronous generators at middle voltage according to TOR 1.1 2019; the most difficult FRT behavior was chosen)

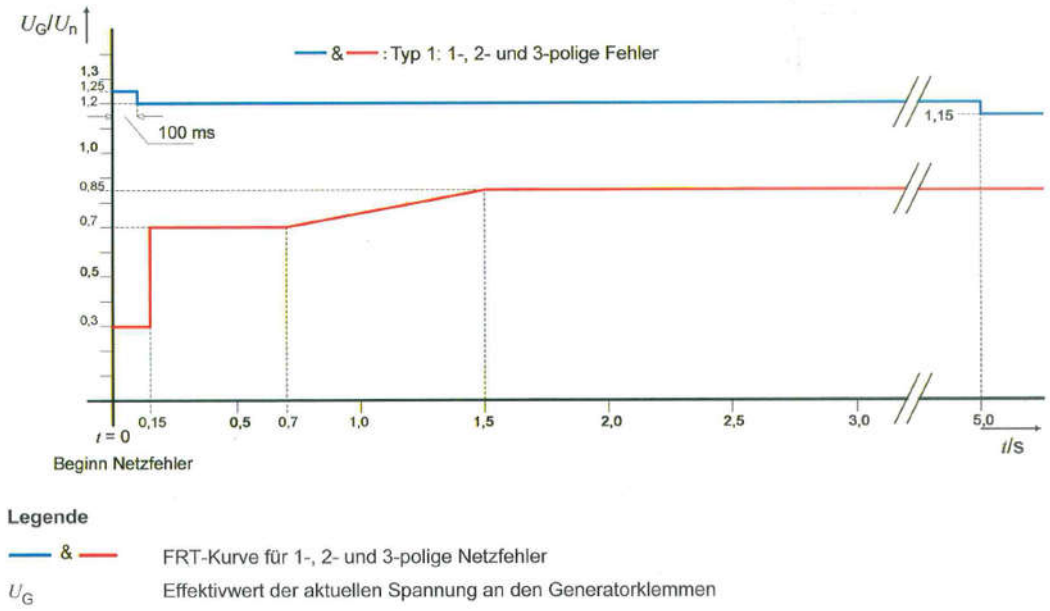

(FRT profile according to VDE-AR-N 4105:2018 Type1- synchronous generators only)

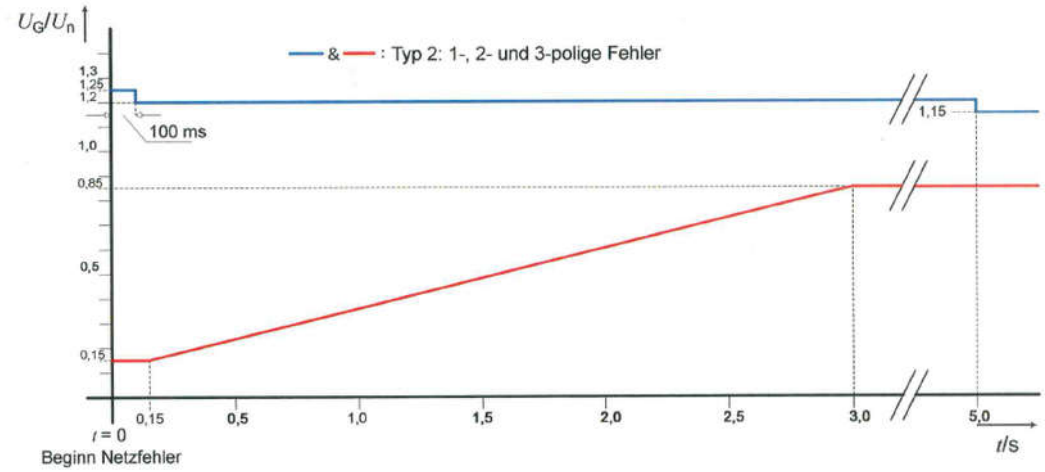

Legende

&	FRT-Kurve für 1-, 2- und 3-polige Netzfehler
UG	Effektivwert der aktuellen Spannung an den Generatorklemmen

(FRT profile according to VDE-AR-N 4105:2018 Type2- converter and others)

This FRT behavior applies to the entire AC supply range 110-230VAC. For a supply with 24VDC, the FRT behavior (no dropout of the output relays R1/R2) is not guaranteed. In this case, the power plant installer must ensure that the 24VDC is adequately buffered (device consumption 1.25W / 4VA).

In case of a total power loss for example L1 goes offline, and A1 & A2 are connected to L1 and N, the internal power supply unit bridges the gap. The NA protection relay does not reset and the relays R1 & R2 do not switch off.

Buffer times are defined as follows:
230VAC <580ms
110VAC <200ms
24VDC < 70ms (NA protection supplied externally)

However, the internal buffering only takes the NA003-M64 into account. In case of NA003-M64 A1/A2 is also connected to the isolating contactors on A1/A2, a separate calculation of the internal consumption of the isolating contactors must always be done.

4.4.3 Self retention for remote shutdown with manual reset

For special applications, the network operator may require a manual reset after a remote shutdown. This is currently possible through the implementation of a self-retaining circuit:

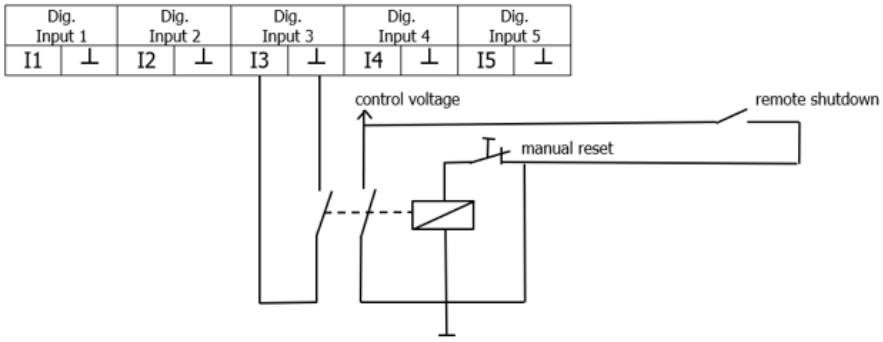

4.4.4 Connection of a load management device for power reduction 0%

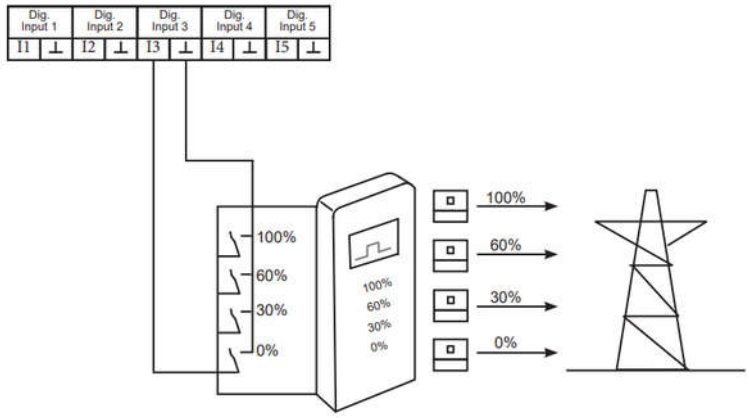

4.5 Supply circuit

Terminals	A1 (L or +); A2 (N or -); V+/GND: 24V d.c. ⎓ (*A)
Supply voltage	DC: 24V AC: 110 - 230V V+/GND: 24V d.c. ⎓ (*A)
Tolerance of the supply voltage	DC: ± 10% AC: ± 30% V+/GND: ± 15% (*A)
Nominal consumption total Nominal consumption A1/A2	max. 1.35W / 4VA @ 230V AC & Interface 24V d.c. ⎓ (*A) max. 1.25W / 4VA @ 230V AC
Nominal frequency	50 / 60Hz
Tolerance of the nominal frequency	48 - 63Hz
Duration of operation	100%
Recovery time	6 seconds + set turn-on delay
Drop-out voltage	7V
Overvoltage category	III
Rated surge voltage	6 kV
Internal fusing	250V / 500mA slow blow (soldered)

To ensure the device's functionality during a power failure, the device is to be supplied via an external UPS system!

4.6 Measuring circuit

Terminals	L1-L2-L3-N
Measuring input	3x 400V AC
Input impedance	1MΩ
Input burden	<275mW (at 3x230V a.c. ~)
Measured quantities	Phase to phase voltage, phase-to-neutral voltage, 10 minutes voltage average, frequency, frequency change (RoCoF), Phase shift (PShift), Zero Sequence

4.7 Measuring ranges

Phase voltage	0 - 560VAC
Phase-to-neutral voltage	0 - 325VAC
Frequency	40 - 65Hz (measured between L1/N)
RoCoF	100mHz/s - 2.000mHz/s
PShift	1 - 15°
Overload capacity	Permanent 1.4 x U_{Nom} Impulse 1.6 x U_{Nom} (1 second)
Overvoltage category	III
Rated surge voltage	4 kV

4.8 Digital inputs

Terminals	I1 and ⊥; I2 and ⊥; I3 and ⊥; I4 resp. I5 and ⊥ I1, I2, I3 could be configured as n.c., n.o. and dis.
Contact type	potential-free (max. cable length 30m, laying as a control line, separate from power cables)
Switching capacity	24V / 5mA d.c. ⎓
Input burden	<120mW

4.9 Output circuit

Terminals	11-12-14; 21-22-24; 31-32-34
Number and type of contacts	3 changeover contacts
Contact material	AgNi
Switching capacity	5A / 250V a.c. ~
Output burden	1250VA
Electrical switching frequency (AC1-)	100 x 10^3 switching cycles
Mechanical switching frequency	15 x 10^6 switching cycles
Continuous current value	5A
Short time value (1s)	5A
Withstanding voltage across open contacts	Relay contacts: $1000V_{rms}$ Terminals: $450V_{rms}$
Overvoltage category	III
Rated surge voltage	4 kV
Fusing	5A/250V fast acting

4.10 Accuracy

Voltage measurement:	
Base accuracy	< 0.5% @ +25°C
Temperature effect	< 0.01%/°C
Resolution	10mV
Frequency measurement:	
Base accuracy	< 0.01Hz @ +25°C
Temperature effect	< 0.0002Hz/°C
Resolution	1mHz
Start-up Ton delay	0...600s ± 0,6%
response-delay (TIME OFF), $t_{UTHR\ OFF}$	0...300s ± 0,6%
Reset (Release) delay, $t_{UTHR\ ON_total}$	130ms ± 45%
Operating time at overvoltage t_{over}	95ms ± 50%
Operating time at undervoltage t_{under}	95ms ± 40%
Response time, $t_{off_total_over/under}$	$t_{off_total_over} = t_{over} + t_{UTHR\ OFF}$ $t_{off_total_under} = t_{under} + t_{UTHR\ OFF}$
Overshoot time	40ms

4.11 Insulation data

Rated insulation voltage	400V
Insulation	
Supply circuit/measuring circuit	Safe isolation
Supply circuit/output circuit	Safe isolation
Supply circuit / digital inputs	Safe isolation
Output circuit/measuring circuit	Base isolation
Output circuit / digital inputs	Base isolation
Interface(*A)	Safe isolation

4.12 Environmental conditions

Ambient temperature operation	-25 up to +65°C
Ambient temperature storage	-40 up to +70°C
Display capability	-15 up to +65°C
Relative air humidity	5 up to 95%
Pollution degree	2, pollution level can be increased by installation in suitable enclosures (according to IEC 60664-1)
Weight	300g
MTTF	93 000h (for display temperature 25°C +/-5°C)
Installation altitude:	Max. 2000 m above sea level (800mbar)

Installation:	An external circuit-breaker is required for mains installation to the unit. Installation class 1 must be available in the environment
Location:	For indoor use only
Ventilation:	No ventilation of surrounding air required
Cleaning:	If necessary, the surface of the housing may be cleaned with a dry cloth, only when all sources of power are switch off
Installation note:	Power contactors may cause significant disturbances. Therefore, the NA003 should be mounted with a minimum distance of 5 cm to neighbouring power contactors.

4.13 Electrical connection

Connection cross-section	max. 2.5mm^2
Stripping length	max. 8mm
Electrical capacity of the clamps: Relay outputs / digital inputs Measuring inputs	 max. 450V/16A max. 750V/16A
Tightening torque	max. 0.5Nm
Screw	M3, screwdriver for slotted screws 0.6 x 3.5mm
Digital input circuits and output relays	No limitation for simultaneous operation of inputs and/or outputs within the specified limits
Interface / Push-IN (*A):	Push-IN terminals, 0,5mm2, stripping length 6mm, el. withstand 63V / 6A, To loose: slot screwdriver 0.4 x 2mm

4.14 Sealing wire

Wire diameter	Ø max. 1.32mm

4.15 Protection class

Terminals	IP2XB
Housing	IP2XB

4.16 Mechanical resilience

Vibration resilience according to IEC 60255-21-1	Class 2
Schock resilience according to IEC 60255-21-2	Class 2
Seismic resilience according to IEC 60255-21-3	Class 2

5 Settings of the implemented parameter sets

Definition for the following tables:
Lines highlighted in gray mean that the associated parameters can be edited. All other settings are fixed.

5.1.1 Connection Modes

2-wire	Only the voltage between L1 and N is evaluated
3-wire	Only the line to line voltages U_{L1-L2}, U_{L2-L3} and U_{L3-L1} are evaluated
4-wire (LN)	Only the phase-to-neutral voltages U_{L1-N}, $U_{L2-N,}$ and U_{L3-N} are evaluated
4-wire (LN+LL)	Both the phase-to-neutral voltages U_{L1-N}, $U_{L2-N,}$ and U_{L3-N} as well as the phase to phase voltages U_{L1-L2}, U_{L2-L3}, and U_{L3-L1} are evaluated

5.1.2 Units

%Unom	Percent of the nominal voltage (nominal voltage factor)

5.1.3 Functional safety

Errtol 2ch	2 separated contactors with 2 separated auxiliary contacts are connected
Errtol 1ch	1 external contactor with 1 auxiliary contact is connected

5.1.4 Operational mode

It is possible to switch between 2 different operating modes
It is currently only used for the CEI-021

Mode 0:	transitory mode
Mode 1:	definitive mode

5.1.5 Thresholds

U_{THR} OFF	Voltage threshold for the turn-off
U_{THR} ON	Voltage threshold for turn-on
f_{THR} OFF	Frequency threshold for the turn-off
f_{THR} ON	Frequency threshold for turn-on
$RoCoF_{THR}$ OFF	Frequency change threshold for the turn-off
$RoCoF_{THR}$ ON	Frequency change threshold for turn-on
$PShift_{THR}$ OFF	Phase shift threshold for the turn-off
$PShift_{THR}$ ON	Phase shift threshold for turn-on

5.1.6 Times

Time OFF	response-delay
T on delay	Turn-on delay
F wnd	window length frequency measuring (observed time window used for determining frequency f / Hz, adjustable from 0.1s to 1s depending on the used parameter set).
RoCoF wnd	window length RoCoF (Rate of Change of Frequency) measuring (observed time window that is used to determine the RoCoF Hz / s, adjustable from 0.1s to 1s depending on the parameter set used)
PShift wnd	window length PShift (phase shift) measuring (observed time window that is used to determine the PShift / °, adjustable from 0.1s to 1s depending on the parameter set used, whereby only a setting of 0.1 to 0.6s makes sense. Pshift wnd from 0.6s to 1s does not affect the total tripping time.)
Total tripping time	This is made up of the following when measuring frequency, RoCoF or Pshift:

Frequency measurement:	$\text{TIME OFF total}_{f} = \text{Time OFF}_{f} + \text{F wnd}$
RoCoF measurement:	$\text{TIME OFF total}_{RoCoF} = \text{Time OFF}_{RoCoF} + \text{RoCoF wnd}$
Phase shift measurement:	$\text{TIME OFF total}_{PShift} = \text{Time OFF}_{PShift} + \text{PShift wnd}$

5.1.7 Auxiliary contact

Read back of the position of the actuated contactors (via positively driven auxiliary contacts) is required for the necessary functional safety. The following can be selected for these auxiliary contacts:

Contact n.c. (normally closed)	Auxiliary contact is normally opened (recommended implementation)
Contact n.o. (normally opened)	Auxiliary contact is normally closed
Contact dis. (disabled)	Auxiliary contact is ignored (impermissible for standards that require functional safety)
Contact t	Setting the time-delay (for switching off) that could elapse before the auxiliary contact of the coupling relay must feedback to I1/2, otherwise display a contact error.
T ConDelOn	Setting the time-delay (for switching on) that could elapse before the auxiliary contact of the coupling relay must feedback to I1/2, otherwise display a contact error and switch off R1/2. R3 is also activated.

5.1.8 Ranges

Conformity range	Within this range, the device is configured in compliance with the selected standards. Outside of these ranges, the device is no longer compliant with standards and the corresponding certificates lose their validity. This status is shown on the display by the identifier "ncnf." Settings outside of this range are therefore within the operator's scope of responsibility and/or the acceptance authority of the system.
Possible range	Technically possible setting range

6 Safety concept

The system consists of three microcontrollers. CH_A and CH_B are the measuring channels. These channels record, calculate and monitor the measured values, read the inputs for the feedback contacts and switch the associated relay independently. Both measuring channels are structurally redundant (e.g., voltage reference, time base). The third controller CH_D observes both measuring channels for deviations, controls the user interface (LEDs, display, keys) and non-safety-relevant inputs and outputs.

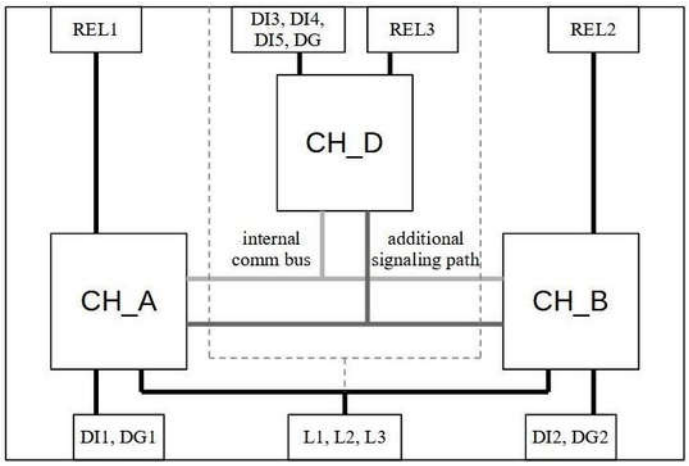

Troubleshooting

Errors are divided into three classes:

1. **Exceeded limit**
   This is a normal operating condition. This includes for example the detection of overvoltage or underfrequency. These faults are handled according to the normative specification. Usually, the relays of CH_A and CH_B are switched off after a trigger delay. After the error is no longer detected and all other parameters are within the permissible limits, the relays are switched on again after a switch-on delay.

2. **Non-critical system errors**
   These errors indicate a problem but are not safety critical. This includes a supply voltage that is too low or a feedback contact that is detected as open and should be closed or internal communication errors.

3. **Critical system errors**
   These errors are safety-critical errors. This includes an extremely high measurement variance of the two measurement channels, thus the memory integrity is not given. If such a fault is detected, the system goes into the safety state (relay in idle state- OFF).

System error:

- T Remote shutdown activated
- 0 CH_A or CH_B contains invalid software (CODEID)
- 1 Software in CH_A and CH_B is differently (CODEVERS)
- 2 Incorrect checksum of the code memory (CODECRC)
- 3 Incorrect checksum of the firmware (currently not used - FLASHCRC)
- 4 Incorrect checksum of the EEPROM (EEPROMCRC)
- 5 Configuration is inconsistent (LOGICVERS)
- 6 Incorrect checksum of the configuration (LOGICCRC)
- 7 Allocated
- 8 Error in the supply voltage for the outputs (POWER6V)
- 9 Error in the supply voltage for the inputs (POWERDIGINP)
- A Deviation of the measuring channels (MEASCOMPAB)
- B Password request deactivated (PWDINACTIVE)
- C Measuring channel does not communicate internally (INTERCOM1)
- D Allocated
- E Allocated
- F Allocated

7 Naomi – Onlineservice

You can use the full Internet service at www.naomi.at or www.naomi.at/SERIALNUMBER (10 digits, from version I. Example: www.naomi.at/0807320001).

With this Onsight support tool for the NA003-M64, you always have access to all important information on your grid and system protection device since product version G. This "digital product life cycle documentation" is available to you 24/7 and bundles all the information for your device relevant to you on a single platform. Whether individual test reports, manuals, manufacturer's declarations, or helpful videos, you will find all documents covering the entire product life cycle here.

The serial number can be found on the display in menu step 3.105 and on a barcode to the left of the device:

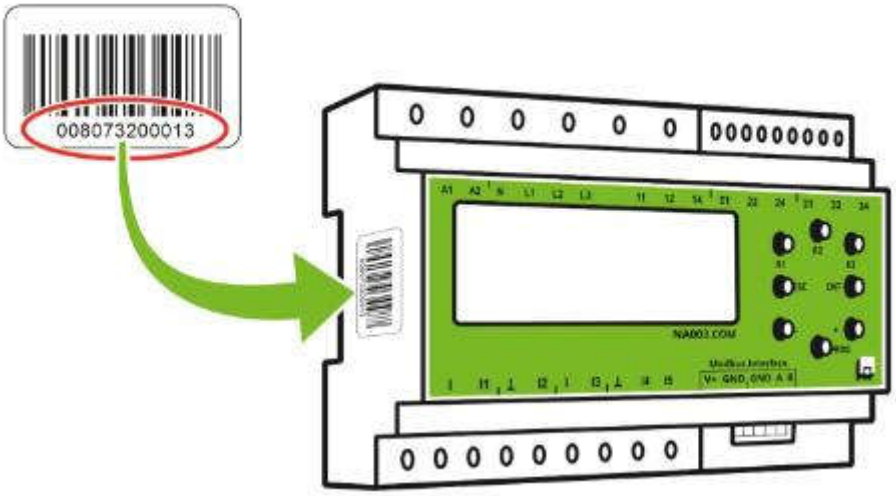

With online registration, you can also take advantage of the following benefits:
- All devices can be viewed in one place
- Location(s) of your device(s) stored
- Only one-time entry of the serial number(s)

8 Glossary

OVE	Austrian Association for Electrical Engineering
TOR	Technical and organizational rules (Austria)
OOE	Upper Austria
W	Vienna
NS	Low voltage
MS	Medium voltage
VDE	Association of Electrical Engineering Germany
AR	Connection rules
NA/EEA- CH	Grid installations/self-generation systems-Switzerland
AS	Australia
NZS	New Zealand
DK	Denmark
IP	Interface Protection
ASS	Automatic Separation System

9 Standards and Norms available

				Number of channels		
Slot	**ID**	**Norm/Standard**	**Regions**	**1**	**2** Funct. safety	**1** or **2** select able
#00	802	OVE TOR R25 NS SYNC	Austria (low voltage)		**X**	
#01	803	OVE TOR R25 NS ASYNC	Austria (low voltage)		**X**	
#02	852	OVE TOR R25 MS SYNC	Austria (medium voltage)		**X**	
#03	853	OVE TOR R25 MS ASYNC	Austria (medium voltage)		**X**	
#04	822	OOE TOR R25 NS SYNC	Upper Austria Oberösterreich (low voltage)		**X**	
#05	823	OOE TOR R25 NS ASYNC	Upper Austria Oberösterreich (low voltage)		**X**	
#06	872	OOE TOR R25 MS SYNC	Upper Austria Oberösterreich (medium voltage)		**X**	
#07	873	OOE TOR R25 MS ASYNC	Upper Austria Oberösterreich (medium voltage)		**X**	
#08	832	W TOR R25 NS SYNC	Vienna (low voltage)		**X**	
#09	833	W TOR R25 NS ASYNC	Vienna (low voltage)		**X**	
#10	882	W TOR R25 MS SYNC	Vienna (medium voltage)		**X**	
#11	883	W TOR R25 MS ASYNC	Vienna (medium voltage)		**X**	
#12	812	TIROL TOR NS SYNC	Tyrol (low voltage)		**X**	
#13	813	TIROL TOR NS ASYNC	Tyrol (low voltage)		**X**	
#14	862	TIROL TOR MS SYNC	Tyrol (medium voltage)		**X**	
#15	863	TIROL TOR MS ASYNC	Tyrol (medium voltage)		**X**	
#16	842	B TOR R25 NS SYNC	Burgenland (low voltage)		**X**	

#17	843	B TOR R25 NS ASYNC	Burgenland (low voltage)		X	
#18	892	B TOR R25 MS SYNC	Burgenland (medium voltage)		X	
#19	893	B TOR R25 MS ASYNC	Burgenland (medium voltage)		X	
#20	311	VDE-AR-N 4105: 2018 (Pn ≤ 50kW)	Germany (low voltage)	X		
#21	312	VDE-AR-N 4105: 2018 (Pn > 50kW)	Germany (low voltage)	X		
#22	313	VDE-AR-N 4105: 2018 (converter)	Germany (low voltage)		X	
#23	314	VDE 4105 FNN24 Umr	Germany (low voltage)		X	
#24	707	VDE-AR-N 4110:2018 TR3-25	Germany (medium voltage)	X		
#25	718	VDE 4110 FNN24 >50kW	Germany (medium voltage)	X		
#26	717	VDE 4110 FNN24 Umr	Germany (medium voltage)	X		
#27	103	CEI 0-21: 2022-03	Italy	X		
#28	110	CEI 0-21 test_setting 1	Italy (Cassetta test)	X		
#29	111	CEI 0-21 test_setting 2	Italy (Cassetta test)	X		
#30	410	G99/1/3: 2018 LV	Great Britain (low voltage)	X		
#31	460	G99/1/3: 2018 HV	Great Britain (medium/high voltage)	X		
#32	510	G98/1/2: 2018	Great Britain (low voltage)	X		
#33	603	C10-11: 2021 LV-IP	Belgium (low voltage) interface protection	X		
#34	610	C10-11LV21 FL	Belgium (low voltage) FLUVIUS / Flanders	X		
#35	620	C10-11LV21 OR	Belgium (low voltage) ORES / Wallonia	X		

#36	602	C10-11: 2019 LV-ASS	Belgium (low voltage) automatic separation system	X		
#37	653	C10-11: 2021 HV-IP	Belgium (medium/high voltage) interface protection	X		
#38	652	C10-11: 2019 HV-ASS	Belgium (medium/high voltage) automatic separation system	X		
#39	1200	NA/EEA- CH 2014 (Type A)	Switzerland 2014 (low voltage)		X	
#40	1220	NA/EEA-NE7 - CH 2020 (Type A)	Switzerland 2020 (low voltage)		X	
#41	1221	NA/EEA-NE7 - CH 2020 (Type B)	Switzerland 2020 (low voltage)		X	
#42	901	EN 50549-1:2019	Europe LV (Netherlands)		X	
#43	926	EN 50549-2:2019	Europe HV (Netherlands)		X	
#44	915	EN50549-1/2 FDC11	FranceC11 LV and HV		X	
#45	905	EN 50549-1 Ireland	Europe LV (Ireland)		X	
#46	910	SRPS EN 50549-1:2020	Europe LV (Serbia)		X	
#47	1300	Romania ANRE 2021	Romania		X	
#48	930	CZ-2024	Czech republic			X
#49	940	EN50549-1: SI Uf A/B	Slovenia Low Voltage		X	
#50	945	EN50549-2: SI Uf C	Slovenia Medium Voltage		X	
#51	1400	Bulgaria LV 2024	Bulgaria Low Voltage			X
#52	1450	Bulgaria MV 2024	Bulgaria Medium Voltage			X
#53	1600	ESPANA RD1699	España		X	
#54	1700	EN50549-1 SWEDEN	Sweden		X	

#55	1110	AB AS 4777.2:2020	Australia		X	
#56	1120	C AS 4777.2:2020	Australia		X	
#57	1130	NZS 4777.2:2020	New Zealand		X	
#58	1135	NSW-Augrid 23	Australia		X	
#59	1140	NSW-Essential 23	Australia		X	
#60	1145	NSW-Endeavour 23	Australia		X	
#61	1150	VIC-United Energy 23	Australia		X	
#62	1155	VIC-Ausnet Energy 23	Australia		X	
#63	1160	VIC-Citipower 23	Australia		X	
#64	1165	VIC-Jemana 23	Australia		X	
#65	1170	VIC-Powercor 23	Australia		X	
#66	1175	VIC-Western Power 23	Australia		X	
#67	1180	ACT-Evoenergy 23	Australia		X	
#68	1185	QLD-Energex 23	Australia		X	
#69	1190	QLD-Ergon 23	Australia		X	
#70	1195	SA-Power networks23	Australia		X	
#71	1001	NRS 097-2-1: 2024	South Africa		X	
#72	1500	Renova-srl	Canada		X	
#73	9006	OPEN SETUP	Freely configurable setup			X

Older Parametersettings / Standards						
#86	950	EN50438 DK	Denmark		**X**	
#87	200	VDE V 0126-1-1:2013	France, Turkey, Belgium, Greece, ...		**X**	
#88	900	EN 50438:2013	Europe		**X**	
#89	801	OVE E 8001/8101:2014	Austria		**X**	
#90	300	VDE-AR-N 4105 tested according to VDE 0124-100:2013	Germany (low voltage)		**X**	
#91	700	TR3 Rev23:2013 certified according to BDEW 2008	Germany (medium voltage)	**X**		
#92	1102	AS/NZS 4777.2:2015	Australia / Victoria (New Zealand)		**X**	
#93	405	G59/3/3: 2015 LV	Great Britain (low voltage)	**X**		
#94	455	G59/3/3: 2015 MV	Great Britain (high voltage)	**X**		
#95	500	G83/2: 2012	Great Britain (low voltage)	**X**		
#96	600	C10-11: 2012 LV	Belgium (low voltage)	**X**		
#97	650	C10-11: 2012 MV	Belgium medium voltage	**X**		
#98	601	C10-11: 2019 LV	Belgium (low voltage)	**X**		
#99	651	C10-11: 2019 HV	Belgium (high voltage)	**X**		

10 APPENDIX (Parameters of the implemented standards in detail)

Parameters of the implemented standards in detail in another document with title:
“Parameter der implementierten Standards im Detail /
Parameters of the implemented standards in detail”

For further information please contact your support:

TELE Haase Steuergeräte Ges.m.b.H.
Vorarlberger Allee 38
1230 Vienna
Austria

PHONE	+43 / 1 614 74 - 0
ONLINE SUPPORT	support@tele-haase.at
WEB	www.tele-online.com